REV.	DATE	DCN #	DRAWING TREE #
v1	2 AUG 2021	E2100338	-
-	-	-	-
-	-	-	-

NOTES CONTINUED:

5. SCRIBE, ENGRAVE, LASER MARK OR MECHANICALLY STAMP (NO DYES OR INKS) A UNIQUE THREE DIGIT SERIAL NUMBER & REVISION NUMBER ON EACH PART. SERIAL NUMBERS START AT 001 FOR THE FIRST ARTICLE AND PROCEED CONSECUTIVELY. BAG AND TAG PARTS WITH THEIR DRAWING PART NUMBER, REVISION, VARIANT OR "TYPE" (IF APPLICABLE), AND QUANTITY. IF PARTS ARE TOO SMALL TO SCRIBE, BAGGING AND TAGGING ALONE IS SUFFICIENT.
   EXAMPLE (PART): 001-v1
   EXAMPLE (TAG): DXXXXXXX-VY, TYPE-XX, QTY: TBD

6. APPROXIMATE WEIGHT = X.XXX LB.

7. MACHINE ALL SURFACES TO REMOVE OXIDES AND MILL FINISH, USE OF ABRASIVE REMOVAL TECHNIQUES IS NOT ALLOWED.
   REFER TO LIGO SPECIFICATION E0900364

8. ALL PARTS SHALL BE MANUFACTURED IN ACCORDANCE WITH LIGO SPECIFICATION E0900364

9. ALL MATERIAL IS TO BE VIRGIN MATERIAL (i.e. NO WELD REPAIRS, PLUGS OR RECYCLED MATERIAL). NO REPAIRS SHALL BE MADE UNLESS APPROVED IN ADVANCE, AND IN WRITING, BY LIGO LABORATORY.
   REFER TO LIGO SPECIFICATION E0900364

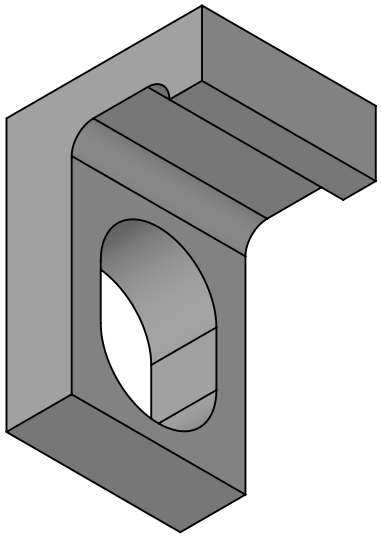

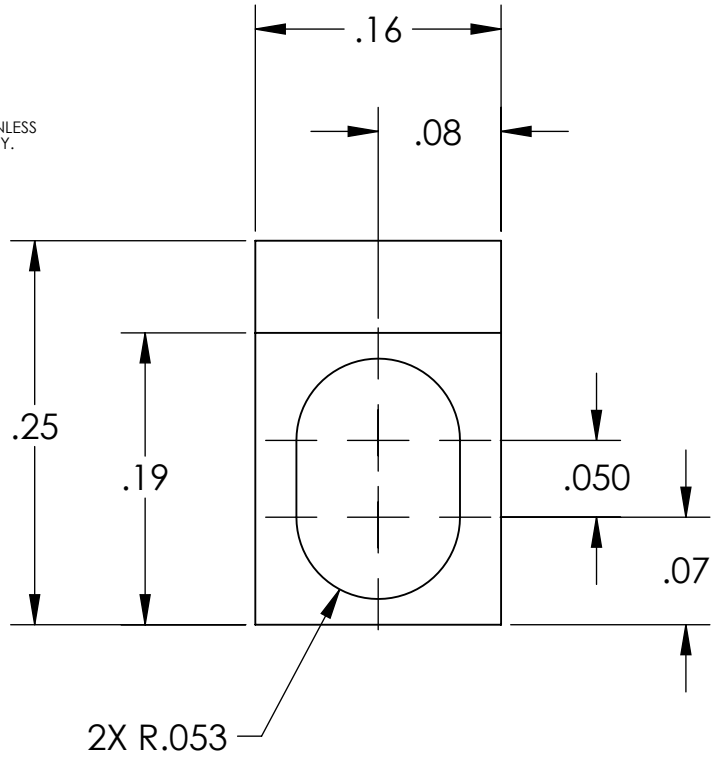

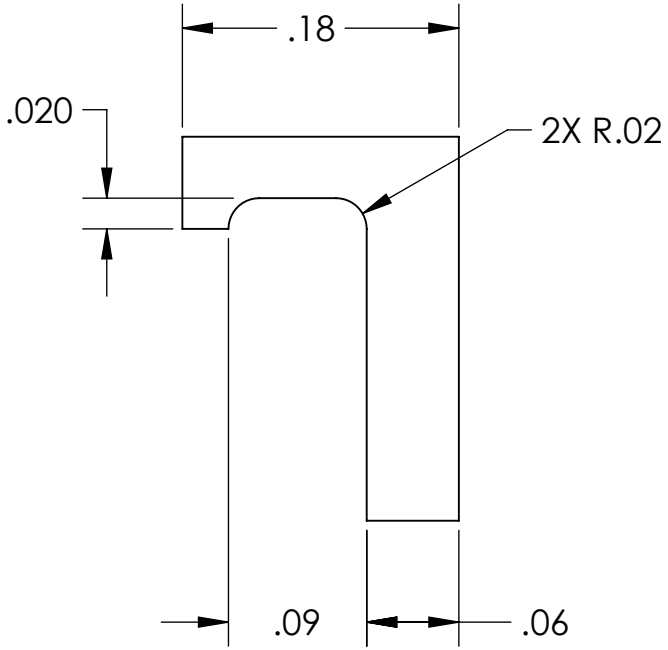

NOTES AND TOLERANCES: (UNLESS OTHERWISE SPECIFIED)

DIMENSIONS ARE IN INCHES

TOLERANCES:
.XX ± .01
.XXX ± .002

ANGULAR ± 0.5°

1. INTERPRET DRAWING PER ASME Y14.5-1994.
2. REMOVE ALL SHARP EDGES, .005-.015. FOR MACHINED PARTS.
3. DO NOT SCALE FROM DRAWING.
4. ALL MACHINING FLUIDS MUST BE FULLY SYNTHETIC, FULLY WATER SOLUBLE AND FREE OF SULFUR, SILICONE, AND CHLORINE.

MATERIAL 6061-T6

FINISH 63 µinch

LIGO CALIFORNIA INSTITUTE OF TECHNOLOGY
MASSACHUSETTS INSTITUTE OF TECHNOLOGY

SYSTEM A+

SUB-SYSTEM SUS

NEXT ASSY D2000275

PART NAME A+, SUS, HDS Thermal SAMS Wire Clamp

DESIGNER	S.NG	04 MAY 2021
DRAFTER	S.NG	26 MAY 2021
CHECKER		
APPROVAL		

SIZE A **DWG. NO.** D2100426 **REV.** v1

SCALE: 8:1 **PROJECTION:** **SHEET 1 OF 1**

PART PDM VERSION: y-004
DWG PDM VERSION: y-005
D2100426 A+, SUS, HDS Thermal SAMS Wire Clamp