

LASER INTERFEROMETER GRAVITATIONAL WAVE OBSERVATORY

E2

LIGO Laboratory / LIGO Scientific Collaboration

LIGO-T2100025-v1 *LIGO* 06/07/2021

Thermal SAMS Assembly Procedure

Huy Tuong Cao, Sebastian Ng, Peter Veitch

Distribution of this document:
LIGO Scientific Collaboration

This is an internal working note
of the LIGO Laboratory.

California Institute of Technology
LIGO Project

Massachusetts Institute of Technology
LIGO Project

LIGO Hanford Observatory

LIGO Livingston Observatory

http://www.ligo.caltech.edu/

1 Introduction

The purpose of this technical note is to describe the procedure for assembling the HDS Thermal SAMS Actuator. This is currently a living document and will be updated

2 In-air assembly

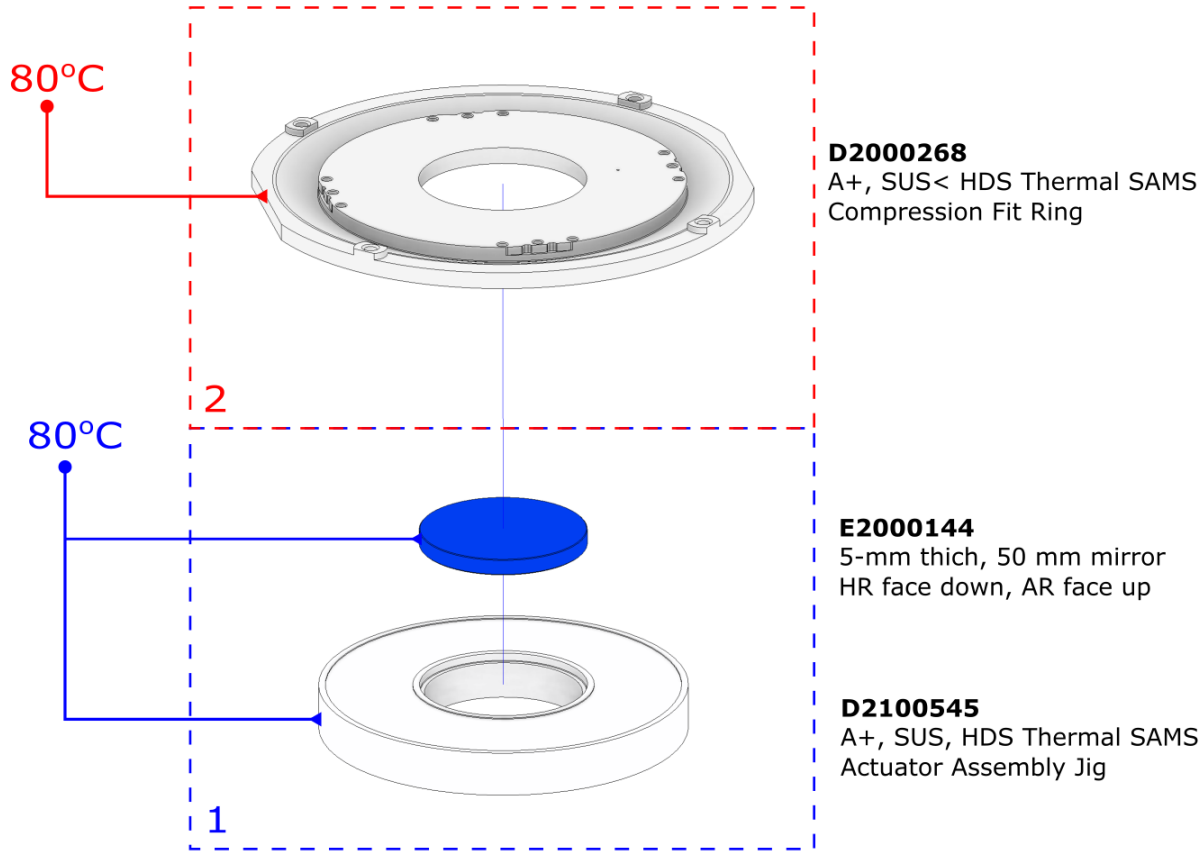

Fig. 1.The basic steps of in-air assembly of the T-SAMS

The in-air assembly procedure of the final T-SAMS is similar to that of the previous prototype T-SAMS actuator. Fig. 1. shows the basic steps in this procedure. The key part in this procedure is the assembly jig (D2100545), which has a recessed slot in which the mirror can sit comfortably in. For the 5-mm thick, 50 mm OD mirror used in TSAMS (E2000144), the diameter of this slot is 50.05 mm; and the HR surface of the mirror sits at 2.5 mm below the upper surface to give us the 2.5 mm offset in our design (see Fig. 2).

Another key detail of this design is that most of the area on the top surface is recessed by 0.3 mm, leaving only 2 concentric rings with radial width of 2-mm. These are the two areas that will come in contact with the actuating ring (D2000268)- see Figure 3. Per advice from our technicians, this allows them to machine the two areas to achieve very good parallelism on the lathe.

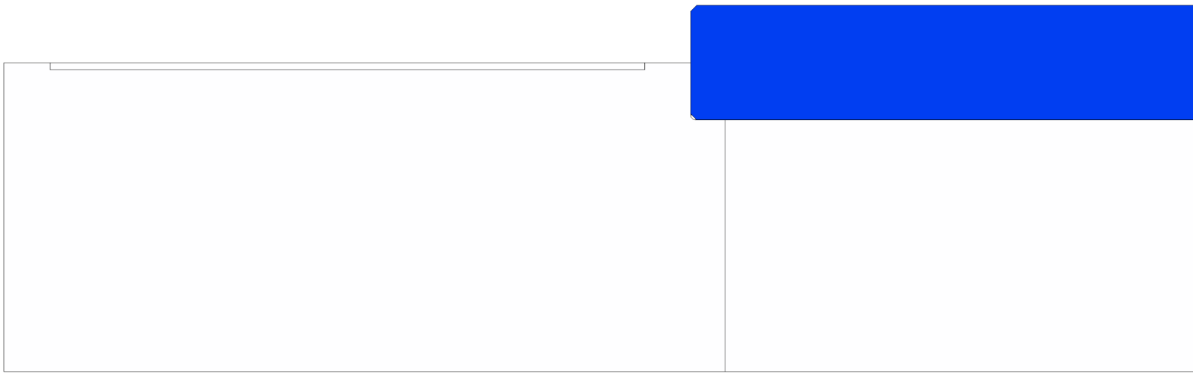

Fig.2.Step 1 of in-air assembly, place the mirror into the recessed slot in the assembly jig.

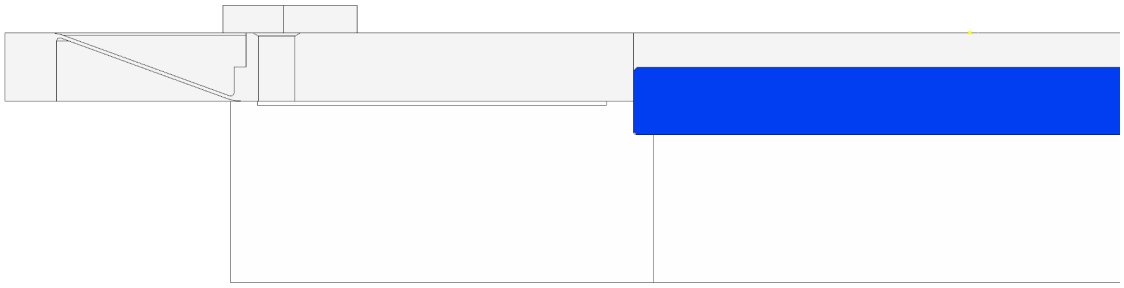

Fig.3. The compression fit ring should slide onto the mirror once heated up. The ring will come into contact with the assembly jig along the two concentric protruded rings.

Procedure:

- Measure the OD of the mirror, machine the actuating blank (D2100113) so that it gives 55 ± 5μm.
- Place the mirror with HR surface down (AR surface up) into the recessed slot of the jig and try to center by eye as much as one can.
- Place the mirror into a cleanroom air-bake oven, together with the machined actuating ring, which is placed on the lower rack (Clean and bake of all components have been assumed here) [1 (See Note)]
- Turn on the oven and start ramping to 80 degree Celsius in 30 minutes. Allow all components to dwell at this temperature for another 20 minutes.
- Open oven and quickly, but carefully remove the actuating ring from the lower rack and bring it to slide it down onto the mirror. The actuating ring should slide down easily. [2]
- Close the oven door and let the whole assembly sit at 80 degree Celsius for another 10 minutes before ramping down, first to 50 degree Celsius in 20 minutes, and dwell at this temperature for 30 minutes.

- Continue ramping down temperature to ambient temperature, over the next hour.
- Well done, remove the assembly from the oven, wrap in lint-free cloth, then UHV foil, before bagging it to store before vacuum bake.

Note:

1. Previously, for our prototypes, we use two heating plates to heat up the jig+mirror and the compression fit ring separately before bringing the 2 together. See Fig.4.
2. If there is any resistance felt during sliding the compression fit ring onto the mirror, immediately remove the ring, close the oven door and ramp it up in increments of 10 degrees and retest it.

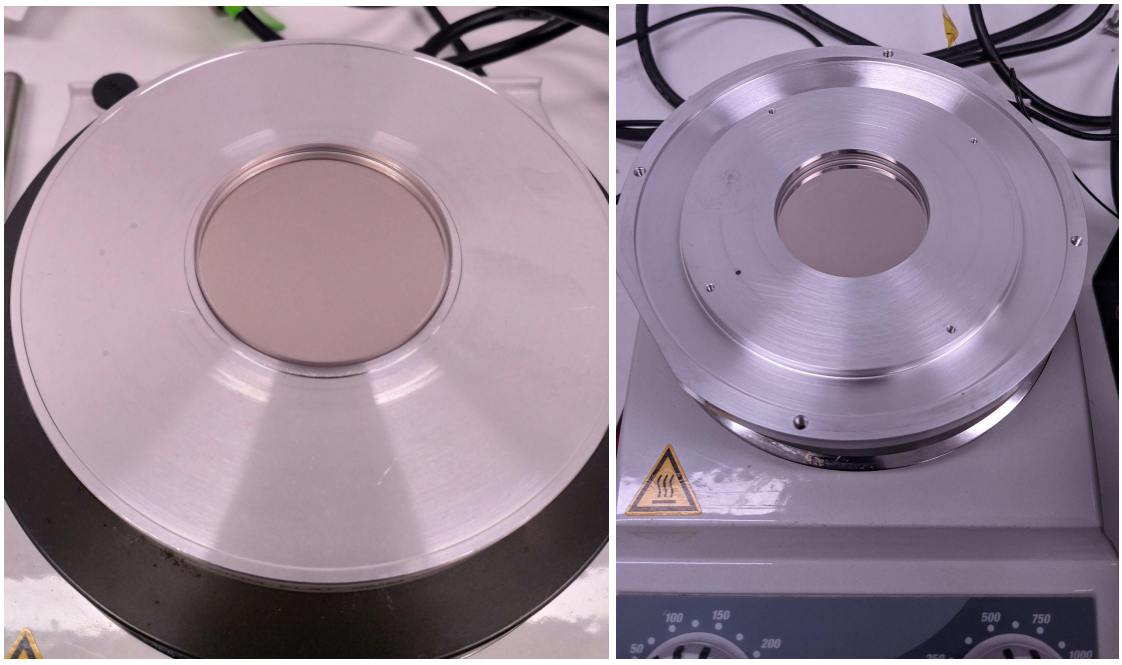

Figure.4. *Left*: The mirror sits inside the recessed slot on a heat plate. *Right*: the compression ring is placed onto the mirror and the jig once both components have reached the same temperature (here for the prototype, the interference is 70 μm and requires heating up to 120 degree C)

3 In-vacuum bake

