E2000634 - Thermal SAMS - Final Design Document

Huy Tuong Cao, Sebastian Ng for the design and testing team

(A collaboration of the LIGO groups at Adelaide, Caltech, MIT & Syracuse)

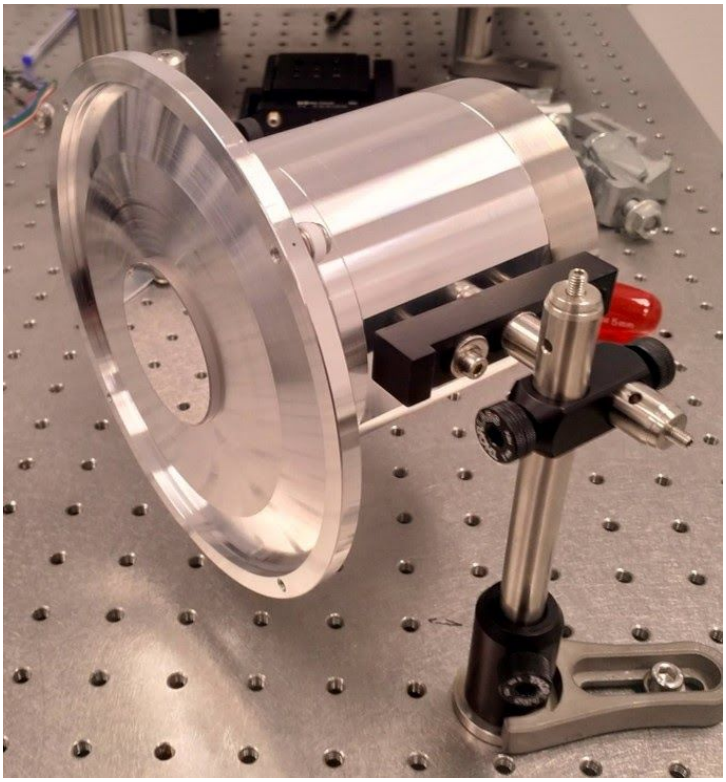

1. Introduction

This is the final design document of the Thermal-SAMS actuator, one of the two types of actuators being deployed for active wavefront control for O4.

Prototypes of T-SAMS have been extensively tested. The results of these tests are incorporated and presented here.

One T-SAMS unit will be used in HAM6 at each site (OM2) for O4 (see D1800027). There are three mirrors of three different radii of curvature for each site to accommodate a larger range of actuation (see E2000144). There should be thus 6 units of T-SAMS made for O4.

The T-SAMS are integrated into the HAM Double Suspensions. The integration of the SAMS units into the HDS has been discussed in detail during the HDS Review. More details regarding the integration of the thermal shield into the HDS will be presented here. A fit-check of a T-SAMS unit is being carried out at the time of writing this document.

A unit of the final design T-SAMS has been procured as part of the R&D program and maybe used for O4. The pathway to readiness of this unit is an important part of the scope of this review

2. Final Design Document

The main DCC page of the SAMS project is:

- LIGO-E1800298: Suspended Active Matching Stage (SAMS) - Main DCC Page

The main DCC page of the Thermal version is:

- LIGO-E1900359: SAMS - Thermal Compression Fit Mirror - Main DCC Page

The main DCC page of the Preliminary Design Review is:

- LIGO-E2000274: Suspended Active Matching Stage (SAMS) - Preliminary Design Document

The Preliminary Design Document is:

- LIGO-E2000274: Suspended Active Matching Stage (SAMS) - Preliminary Design Document

The PDR report:

- LIGO-E2000305-v1: Review Report: LIGO A+ Active Wavefront Control sensors and actuators (ISC/AWC) Preliminary Design Review (PDR)

The official recommendation from the PDR:

- LIGO-L2000226-v1: PDR Report: LIGO A+ Active Wavefront Control sensors and actuators (ISC/AWC)

Important documents of for this review

- LIGO-E2000634: Thermal SAMS - Final Design Document
- LIGO-Q2000022: Inspection of SAMS mirrors for O4

3. Action items from PDR

From the PDR report:

- LIGO-E2000305-v1: Review Report: LIGO A+ Active Wavefront Control sensors and actuators (ISC/AWC) Preliminary Design Review (PDR)

The implementation plan is to use and test both the thermal and piezo version of the actuators for O4, with the thermal version in the current place of OM2, and the piezo version in the HAM7 filter cavity paths. The principle remaining concerns are with the remaining testing rather than design. The first being to determine the high-order uncorrectable wavefront error introduced by these actuators, which is being measured but limited by optic quality. The second is to determine the defocus noise introduced by mirror stress.

- Cao: Testing completed on prototype, using both Hartmann wavefront sensor (HWS) and Zygo. See Section 10 for details.

A class-A HDS spare should exist for the potential need of a reconfiguration of the OM2 AWC actuator in the event that defocus noise is identified as impacting the interferometer. The spare will allow a reconfiguration that will minimally cost commissioning time.

- Fabrice: We only have 4 mirrors of the nominal type.

Furthermore, testing of the wavefront quality and the defocus noise should continue as those considerations are unresolved but they do not impact the design aspect of the review.

- Cao: Testing to be completed at MIT

4. Final design

The thermal assembly is made of the following components:

- The fused silica mirror (1) is 50 mm diameter and 5 mm thick.
- A monolithic ring consisting of the actuator ring (2) connected to the supporting ring (3) via a conical flexure membrane (4) of 0.3 mm thickness. The structure is monolithic and made from Aluminum 6061-T6. A small hole is fitted into the actuating ring to accommodate a thermistor to measure temperature
- Four ceramic-resistor heaters with a nominal resistance of 25Ω (5), procured from Barry Industry, are used to heat the T-SAMS.
- Four macor struts (6) connect the supporting ring (4) and the manifold (7).
- The manifold is made from aluminum 6061-T6
- The HDS body (8) is made from aluminum 6061-T6
- The counterbalance ring (9) provides extra mass to the assembly and balances the front structure. This ring is made from stainless steel 316.

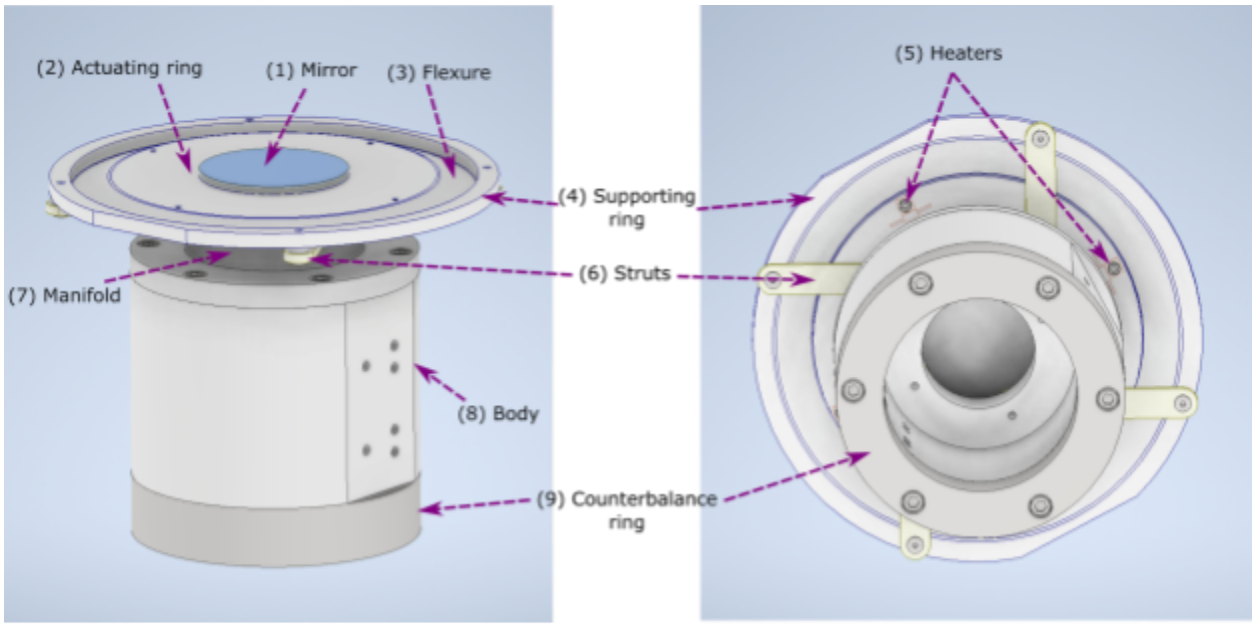

Fig. 1. Side and rear view of the T-SAMS CAD Model

5. Assembly, CAD model and drawings

Adding top assembly drawing

The main page of T-SAMS CAD drawings is D2000267: SAMS - Thermal Mirror - General Assembly Drawing.

The related documents are:

Related Documents:

- LIGO-D2000268: A+, SUS, HDS Thermal SAMS Compression Fit Ring
- LIGO-D2000269: A+, SUS, HDS Thermal SAMS Strut
- LIGO-D2000270: A+, SUS, HDS Thermal SAMS Manifold
- LIGO-D2000271: A+, SUS, HDS Thermal SAMS Body
- LIGO-D2000272: A+, SUS, HDS Thermal SAMS Shield Front
- LIGO-D2000273: A+, SUS, HDS Thermal SAMS Heater
- LIGO-D2000275: A+, SUS, HDS Thermal SAMS CFM Assy
- LIGO-D2000276: A+, SUS, HDS Thermal SAMS Shield Left
- LIGO-D2000277: A+, SUS, HDS Thermal SAMS Thermal shield right
- LIGO-D2000278: A+, SUS, HDS Thermal SAM Insulation Actuator Spacer

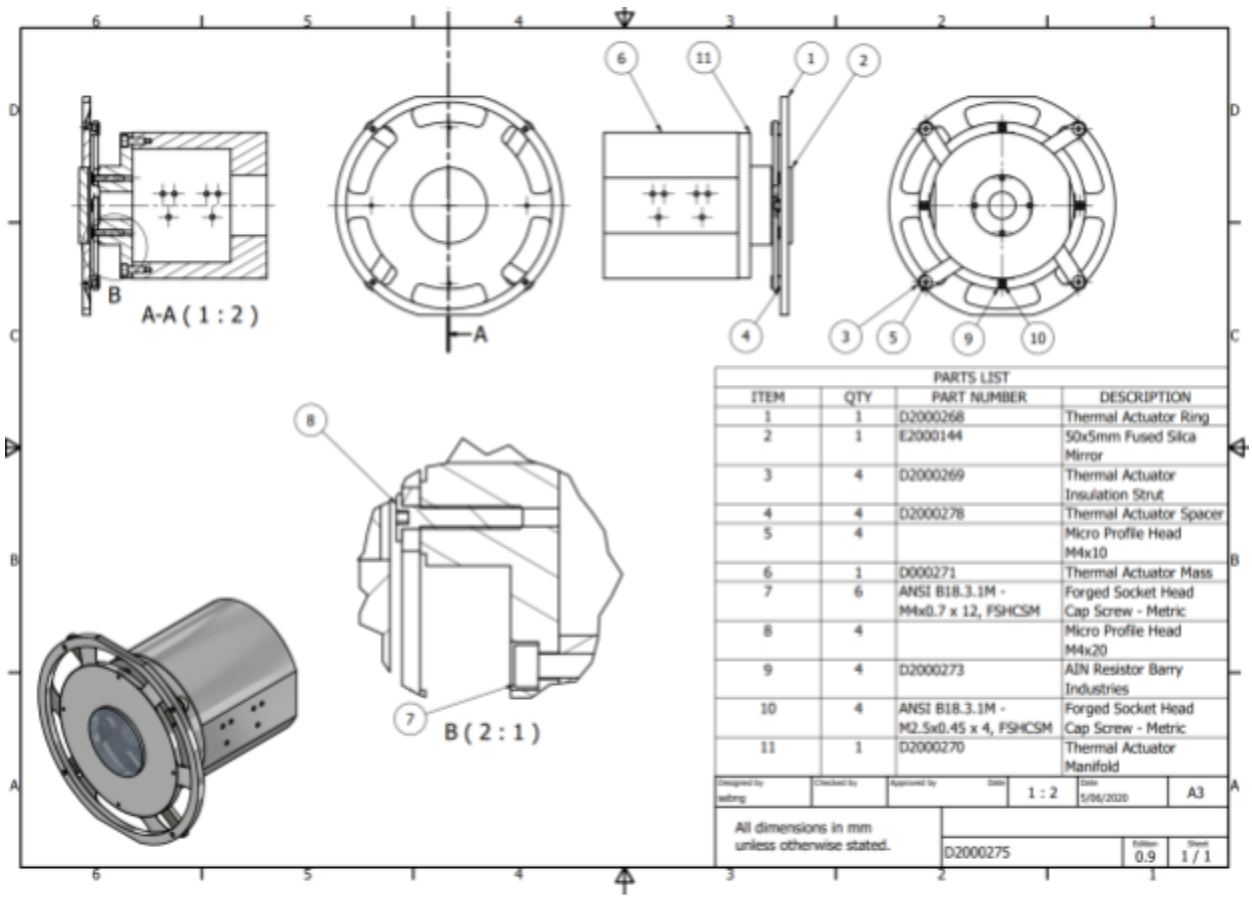

Fig. 2. General assembly of T-SAMS

To-do list:

- Solidworks models must be updated with one configuration per type of flexure
- Drawing must be updated with one sheet per configuration
- Make an IGES for each configuration and send it along with drawings to the machined shop.
- Make sure the CNC is programmed with the IGES for every configuration.

CAD drawing of the actuating element: [D2000268: A+, SUS, HDS, Thermal Actuating Ring]

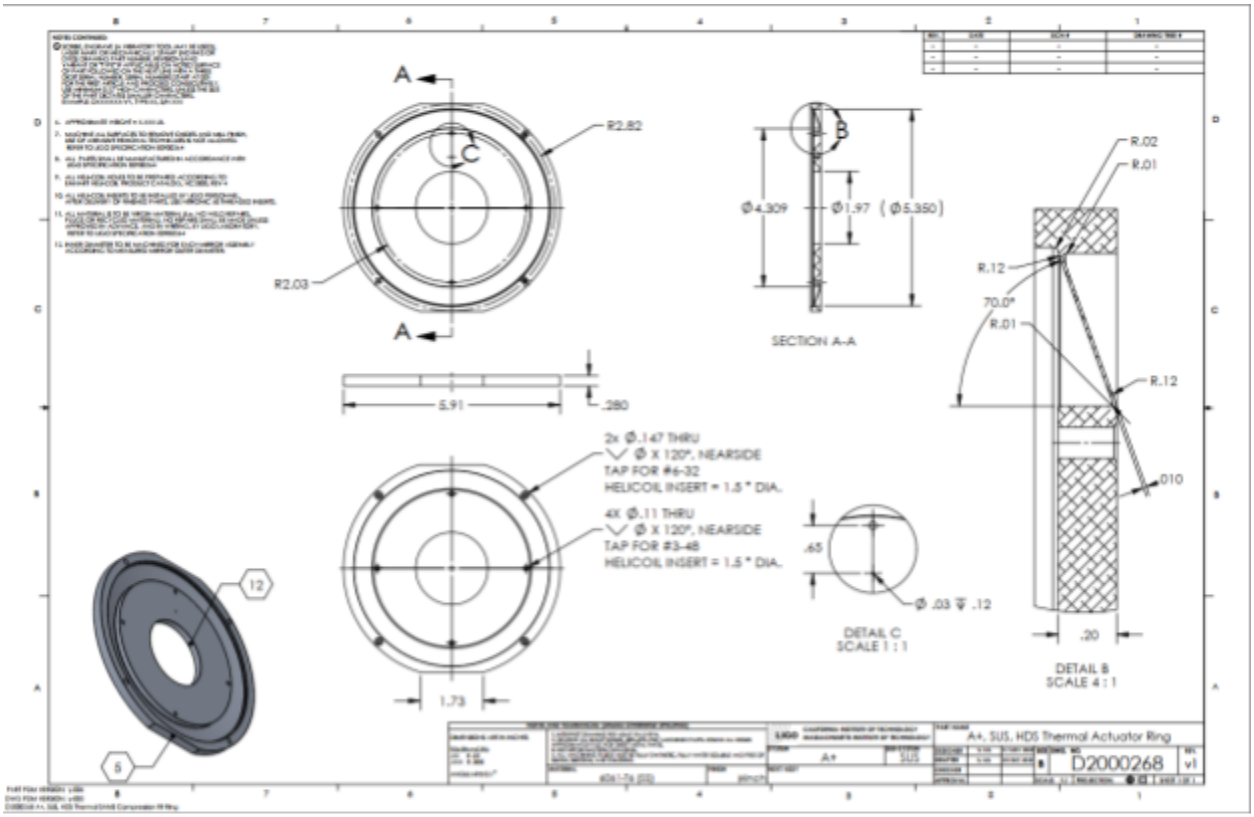

Fig. 3. Actuating ring-flexure drawing

6. Vacuum compatibility - Clean and Bake

To-do list:

- Validate all the components of BOM with Vacuum Review Board (VRB)
- Vacuum test of resistors. List of materials used in fabrication of these resistors are provided by Barry Industry and can be found in D2000273. Testing has been delayed due to COVID-19.
- Do thermistors require approval?
- List BOM and specify handling, cleaning and baking procedure
- Identify all screws types, their manufacturers, materials, etc. here
- Test post-assembly baking. This would reduce an additional shipping step.

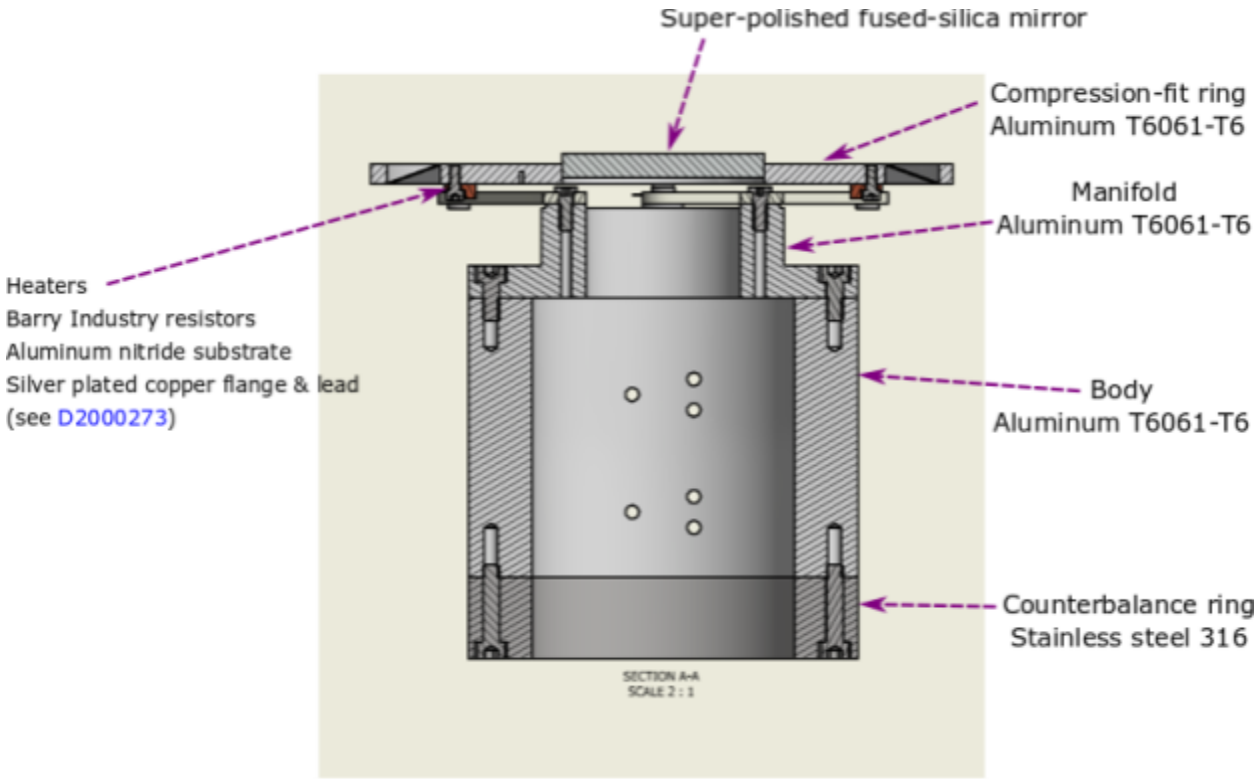

Fig. 4. Materials of components of T-SAMS

Apart from the ceramic heaters, materials used in the T-SAMS components are listed as vacuum-compatible per E960050-v13. Both aluminum 6061-T6 and macor have been previously used at elevated temperature (SR3 heaters with nominal operating temperature at 75◦C (alog42028). We expect all aluminum 6061-T6 will be baked at 150◦C for 48 hours and macor components will baked at 200◦C per E960022-v25. Verification of baking period is required.

The actuating ring and temperature shield parts are made from aluminum 6061-T6 coated with aluminum oxide (Plasma-Tech, 0.002 to 0.004 inch thick coating, surface finish: 125-150 micro-inch surface roughness). This type of flame-spray coating has been previously approved for ISC PD boxes.

7. Actuation range (simulation and tests)

Our prototypes so far have used 6-mm, 2-inch mirrors. Their measured actuation range measured is approximately 300 mD for ΔT= 54 K, corresponding to an actuation coefficient of 5.6 mD/K, which agrees with FEA simulation (5.5 mD/K). The change in defocus of the prototype as a function of temperature is shown in Fig. 6.

For a 5-mm T-SAMS, FEA simulation predicts an increase in actuation coefficient to 6.7 mD/K, resulting in 270 mD actuation range for $\Delta T = 40K$, assuming a maximum operating temperature T_{max} of approx. 60◦C (or 335 mD for $\Delta T = 50K$ assuming $T_{max} \approx 70$ K).

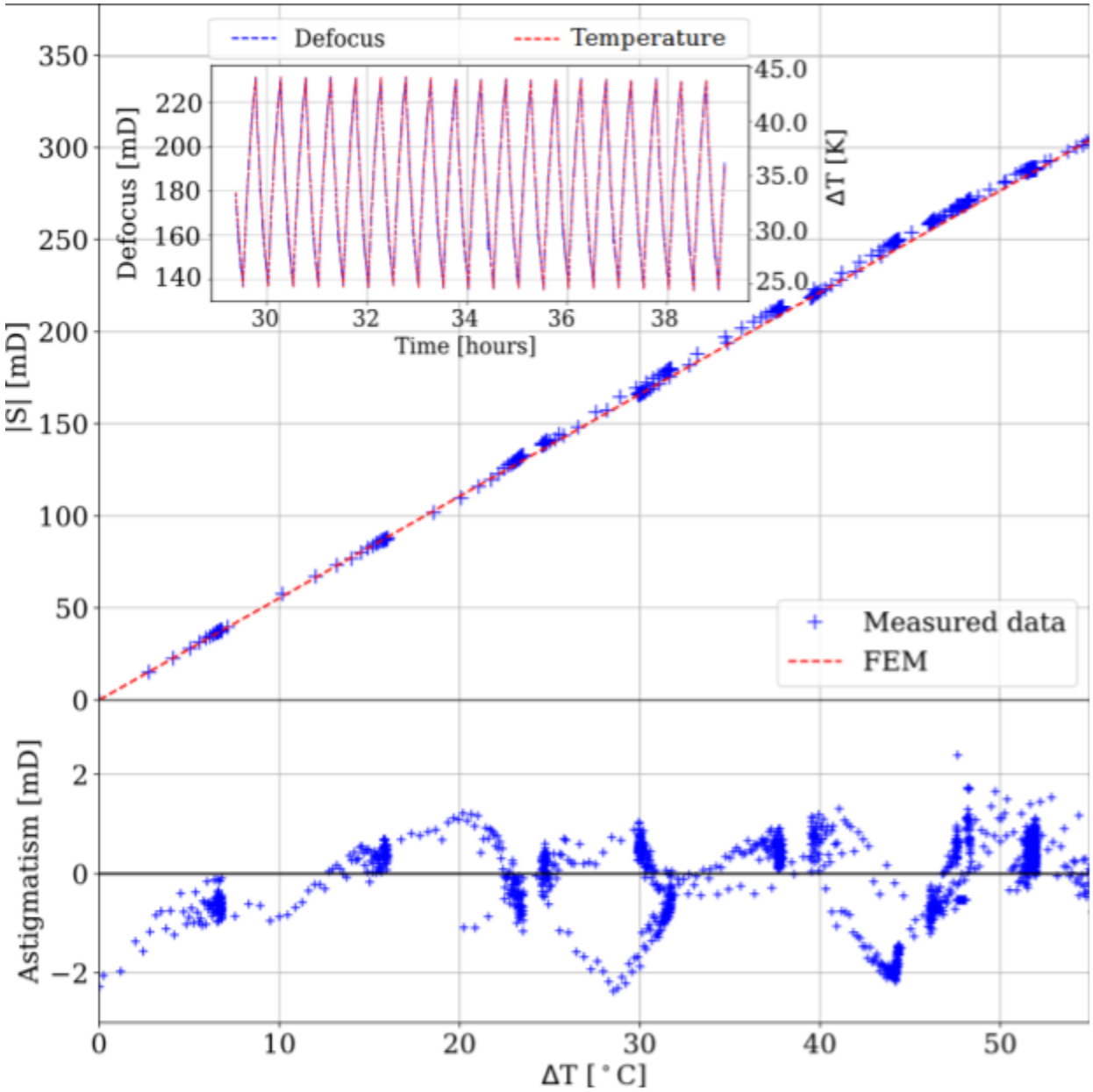

Fig. 5. Plots of the measured change in defocus and the FEM predictions (*top panel*), and astigmatism (*bottom panel*) as a function of change in temperature. *Inset*: The typical temporal variation in temperature and defocus in response to square-wave heating modulation

8. Static Preload

The following document describes how we accounted for the static and dynamic range of the SAMS actuator for the manufacturing of the mirrors. This was assuming 200 mD of dynamic range. In practice, the T-SAMS can have actuation much greater than this.

LIGO-E1900370: Calculation of the radii of curvature for the manufacturing of the SAMS mirror.

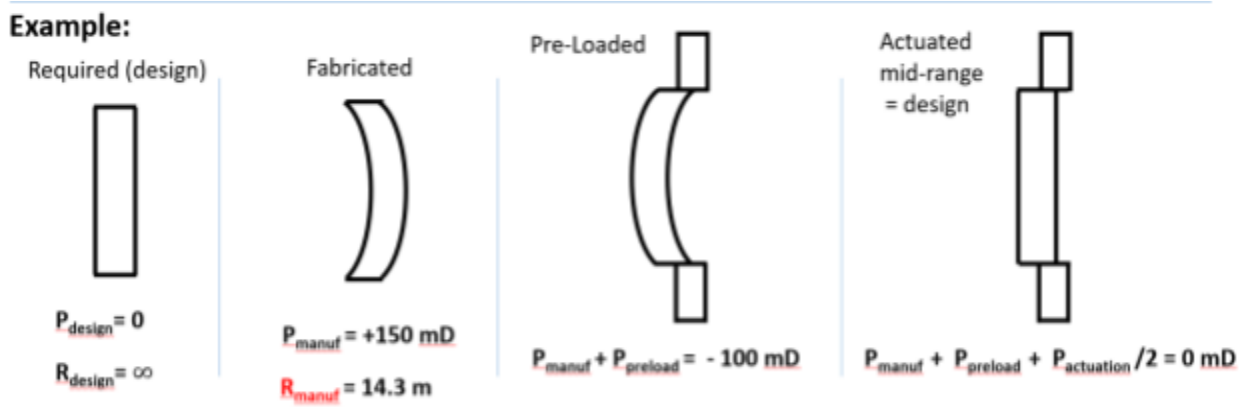

Fig. 7. Excerpt of E1900370 for the thermal actuator.

Here we show an example of OM2 using one of the 3 mirrors procured with different ROC to achieve up to 270 mD actuation range.

Nominal OM2 ROC = 1.7 m, or P=1.18 diopter (D)
Machined: ROC_{manuf} = 1.5 m (P_{manuf} = 1.33 D) (D2000144-v1-E)
Compression-fit:

- 47 micron diametric interference
- Minimum compression fit temperature: 61°C
  → preloaded defocus: 1.33-0.27 = 1.06 D ($ROC_{preloaded}$=1.89 m)

Re-heated:

- ΔT = 18°C (Nominal operating temperature 38°C)
- ROC_{nom} = 1.7 m, P_{nom} = 1.18 D
- Actuation range: -120/+147 mD

We have also measured the static preloaded defocus with both Hartmann wavefront system and ZYGO. The defocus measured with the HWS at Adelaide (ambient temperature 20 degree Celsius) was -370.4 mD . The defocus measured at CIT with the ZYGO was -343.7 mD at 23°C, and thus agreed with the HWS measurement within 3%.

9. Higher order aberrations

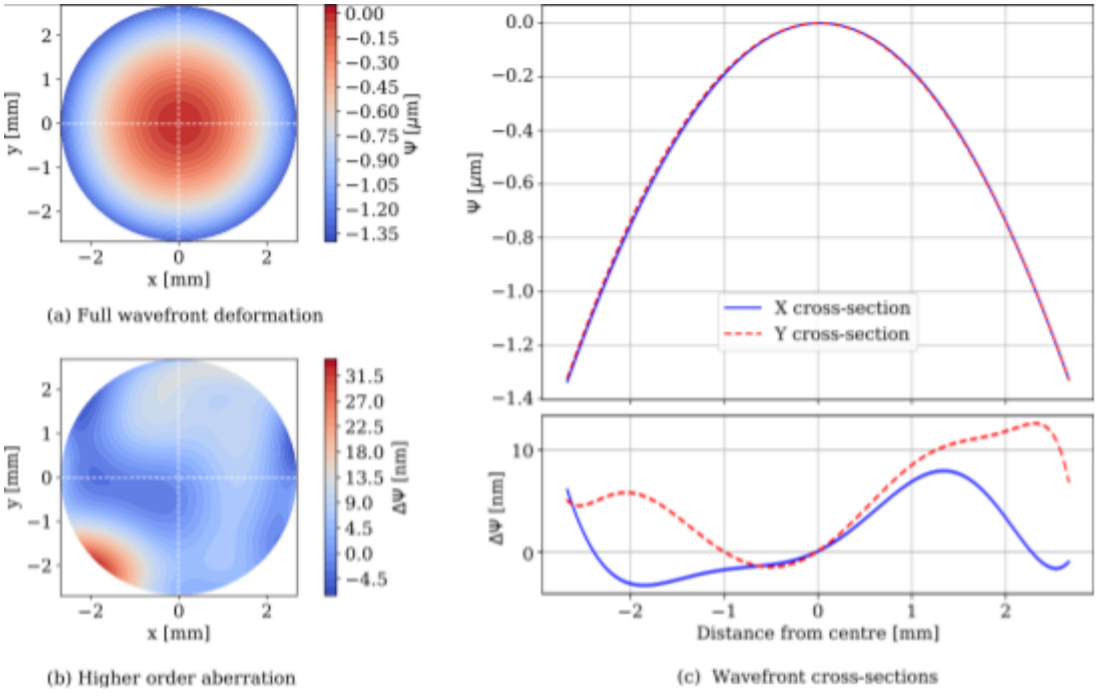

Fig. 6. Static preload deformation measured with the HWS and residual aberration after removal of defocus term

Fig. 6 shows the preloaded deformation when the assembly is cooled to room temperature. Removal of the defocus term results in a map of the higher-order aberrations (b).

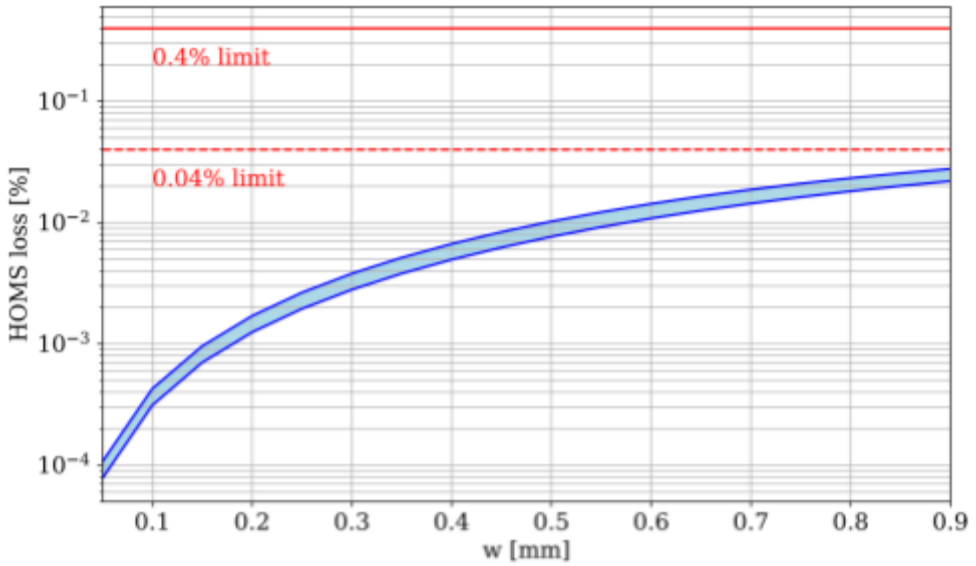

Fig.7. HOMS loss computed from HWS measurement. The shaded regions gives the range of loss when the beams moves within a central 1-mm radius

Results from the 6-mm prototype show that the scatter loss due to higher-order aberrations of the T-SAMS already meets the O4 requirement of 0.4%. It also satisfies the more stringent requirement of 0.04% for future upgrades.

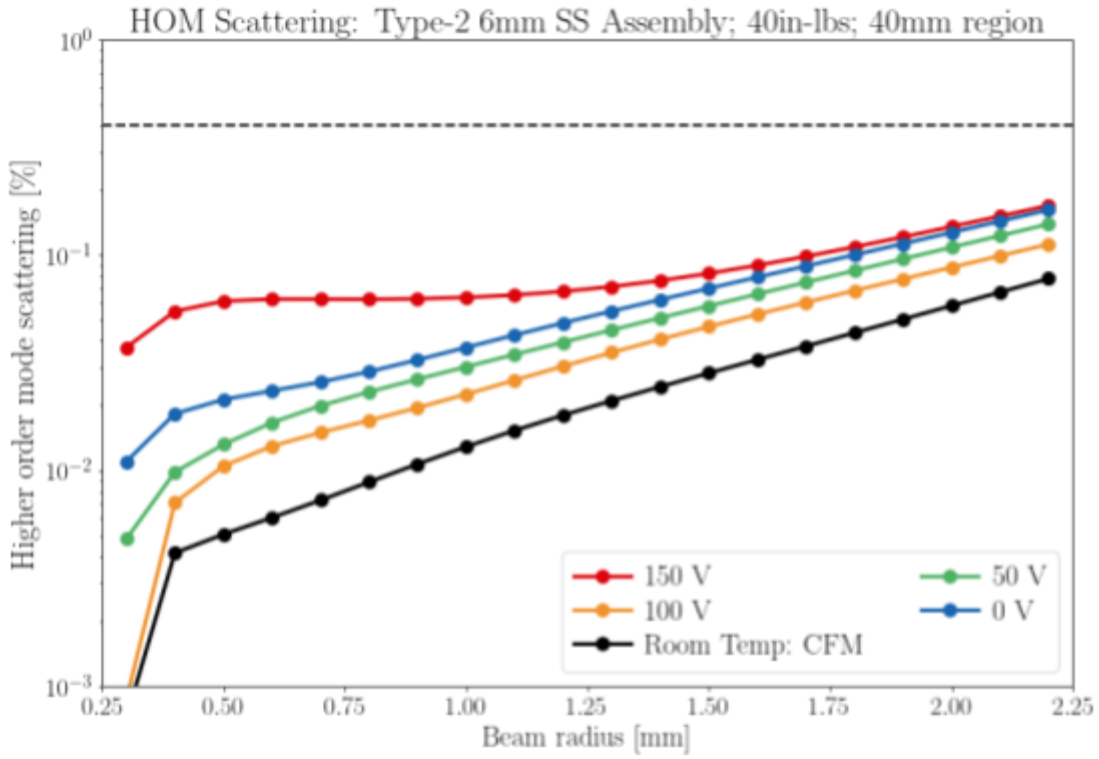

Fig. 8. Higher order mode scattering loss of the T-SAMS at room temperature (black line) computed from ZYGO measurement

10. Noise test

A Michelson experiment is being commissioned at MIT to measure the defocus noise. To validate the requirements, the Michelson must operate in 1e-15m/sqrt(Hz) range. The optical read-out is ready. Modifications to reduce the acoustic couplings were being implemented before the shutdown. Preliminary P-SAMS measurements (E2000580) suggest defocus noise consistent with requirement (T2000244), T-SAMS still requires testing but is expected to perform similarly to the P-SAMS.

11. Thermal shield

The thermal shield provides a uniform temperature environment for the T-SAMS actuator and reduces thermal pollution. The inner surfaces are to be coated with a high emissivity coating to

halve the thermal time constant of the actuator to approximately 15 minutes. The shield is assembled onto the HDS frame after the actuator is installed. The front of the shield replicates the hole pattern of the frame for baffle installation.

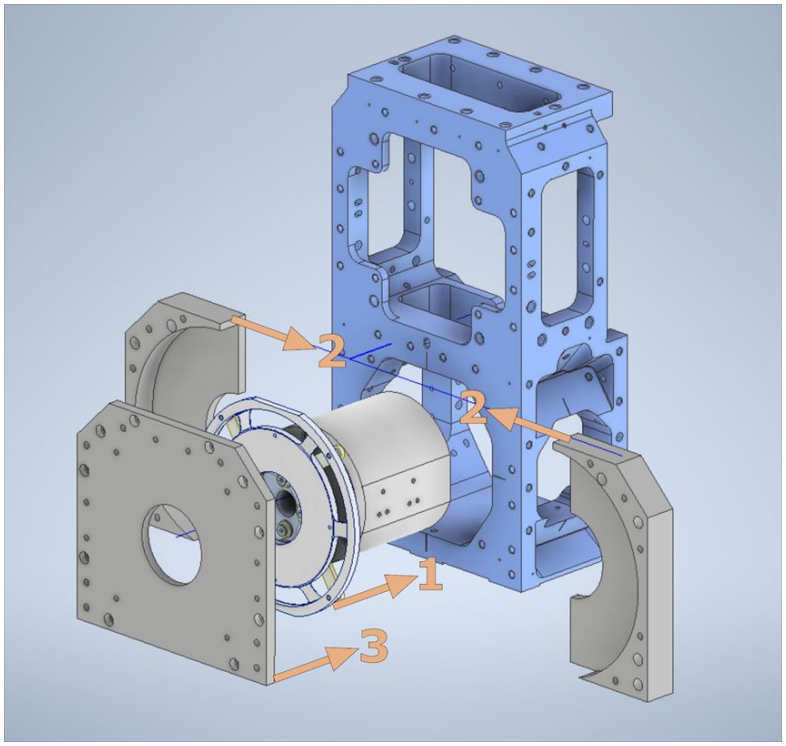

Assembly order for the thermal shield

To-do list:

- Finalise Drawings
- Discuss thermistor integration
- Verify thermal shield compatibility with baffle solution
- Verify compatibility with suspension wires.

12. Heater driver

The main DCC node for the SAMS electronics is E2000300 .
The electrical specification and requirements are summarized in LIGO-T2000289

2. **Resistors**

Parameters	Values
Resistor maker and model*	Barry Industry RA2000-20-8X
Nominal resistance*	25Ω ± 5%
Max rated voltage*	400 VDC
Rated power*	20 W
Operating temperature limit*	-50-150°C
Maximum actuating temperature	60°C

(*)http://www.barryind.com/pdf/Resistors/Power_Flange/RAXXXX-20-8X.pdf

Wire specification (http://www.coonerwire.com/cooner_catalog_rev9-8.pdf):

Parameters	Values
Vendor	Cooner wire and cable
Part #	CZ 1105
Gauge	28 AWG
Current limit	280 mA (**)
Nominal overall diameter	0.024 inch (0.670 mm)
Nominal conductor diameter	0.0138 inch (0.3505 mm)
Coating	Teflon FEP
Teflon emissivity	0.9 (conservative)
Resistance	0.0649 Ω/ft (0.2129 Ω/m)

(**) The current limit is imposed by the increase in temperature of wire, which results in excess outgassing. The temperature change in wires under the nominal maximum operation is discussed in the next section.

3. **Electrical layout**

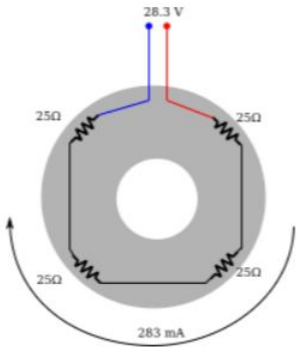

Note that the wires used to provide power to the heaters are now 22AWG wires instead 28AWG as shown in the table above. Other wires (thermistor readout) remain at 28AWG

Power noise requirement to meet defocus noise:

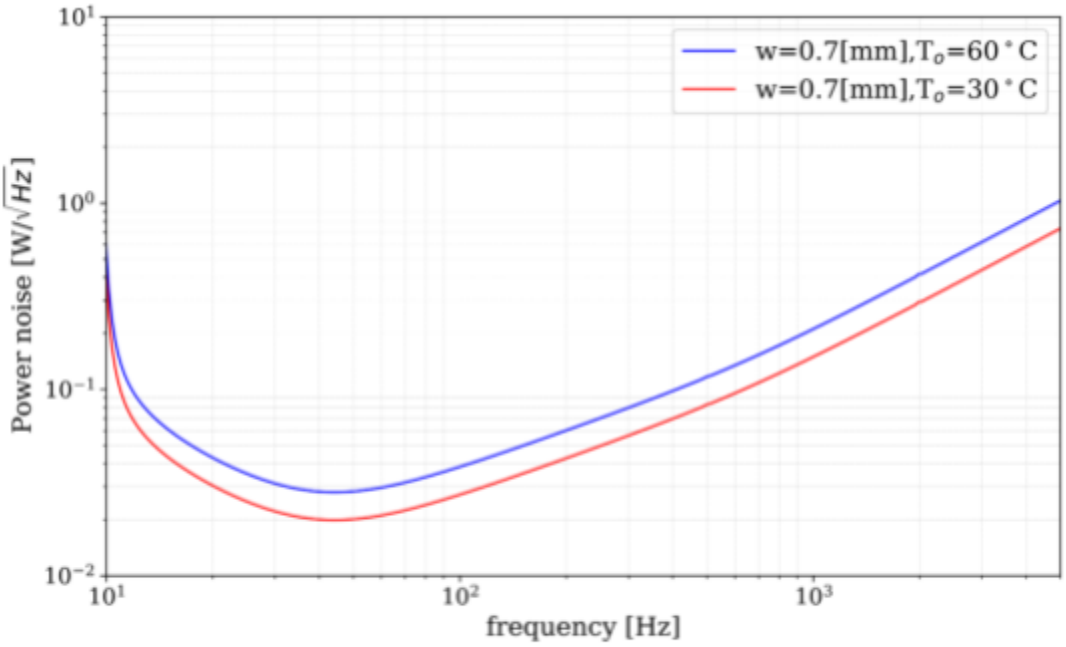

Fig. 9. Power noise requirements

13. Actuator connector and wiring

The wiring chain diagram of the driver for both heaters and piezos can be found in D2000383. As indicated above, FEP insulated 22AWG wires, Part Number CZ2205, are used to power the heaters. This allows for a more comfortable safety margin.

To-do list:

- Determine LLab contact for actuator wiring: _____,
- Design internal wiring layout and
- Add 7-pin mighty mouse connector to counter balance ring (D2000472)
-

14. Integration with the Suspension

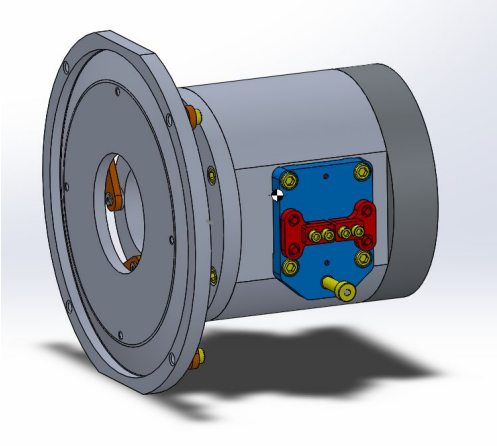

T-SAMS unit with interface brackets, wire clamps and motion limiters

Mass and centre of mass:

Mass: approx. 2.0 kg (this work continues evolving and thus the exact mass and centre of mass will continue to change over the next few weeks).

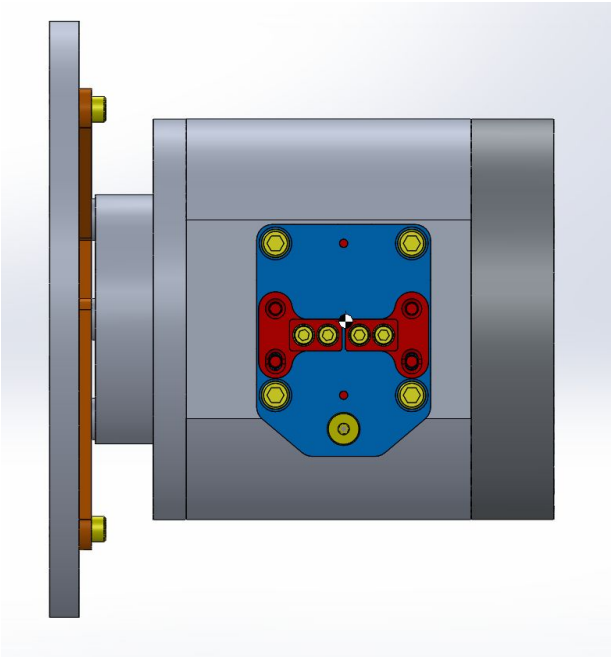

15. Cable routing

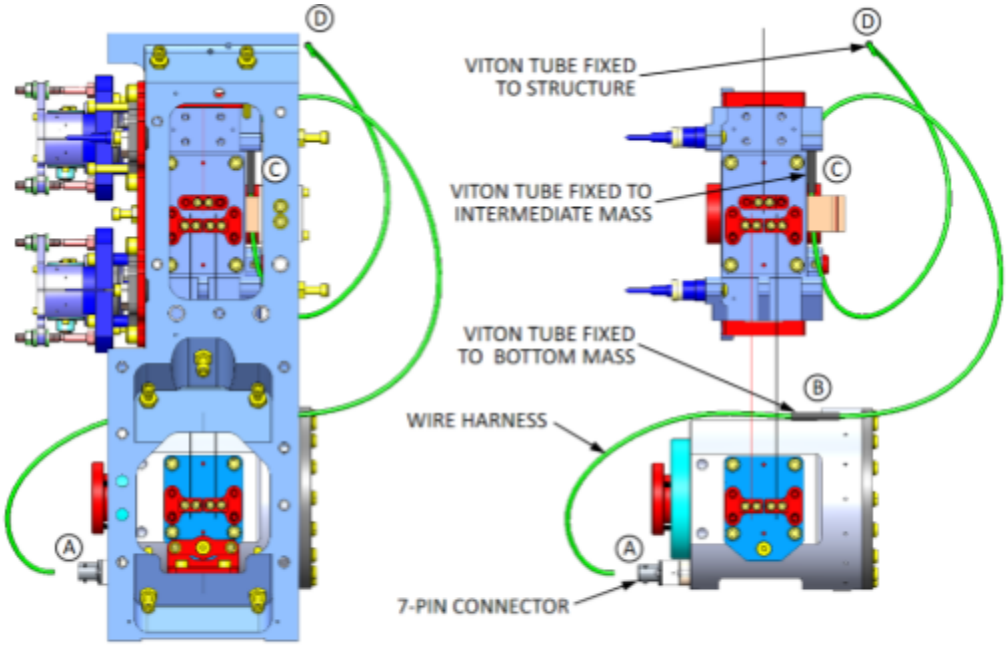

Fig 10. Cable routing configuration recommendation

Cable routine recommendation for P-SAMS: https://dcc.ligo.org/LIGO-G2002118
Cable is wrapped into a loop that is as large as possible and goes up to the intermediate stage. In the T-SAMS design, the front part is enclosed in the thermal shield (see below). This needs modification for the existing routing recommendation.

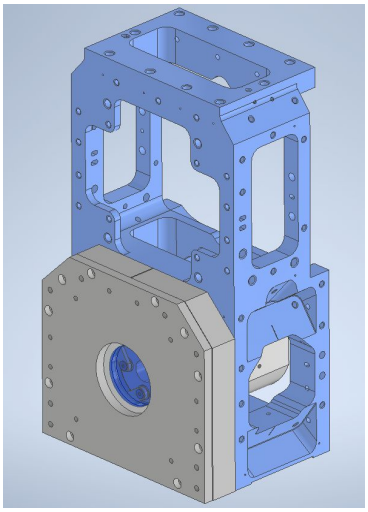

Render of the T-SAMS thermal shield

16. Transport

The actuation portion of the T-SAMS design is a rigid assembly 5.91 inch diameter and 0.28 inch thick. This allows the actuation ring and substrate to be assembled and tested separately from the support structure and then be shipped assembled and then combined with the support structure onsite.

A prototype T-SAMS actuation unit was successfully shipped from Adelaide to CIT as indicated below without damage. Shipment was via DG Air Freight. The parcel was specified to be temperature-sensitive and the temperature during shipment to be around 20◦C. The receipt from DG Air, which actually covered 15kg, is attached.

The final mirror and actuator assemblies will be wrapped in lint free cloth, aluminum foil and then shipped in a padded pelican case. Care must be taken to avoid damage to (or abrasion by) the high emissivity coatings.

DG AIR FREIGHT
Dangerous Goods Specialists

Courier from Adelaide to Los Angeles (FOB)

Quote No	Service Level	Valid From	Valid To
2330 - UNIVOFADL1	Door to Door	24-Jul-20	24-Aug-20

CARRIER
FEDEX

Shipment Information

This Quotation applies to the following shipment:

Weight	Volume	Chargeable	Incoterm
15.000 KG	0.027 M3	15.000 KG	Free On Board

Pickup Address	Delivery Address
UNIVERSITY OF ADELAIDE	LIGO LABORATORY
BADGER BUILDING VIA GATE 12 KINTORE AVENUE	MC 100-36 CALIFORNIA INSTITUTE OF TECHNOLOGY
ADELAIDE SA 5000	PASADENA CA 91125
AUSTRALIA	UNITED STATES

PACKS	TYPE	WEIGHT	VOLUME	LENGTH	WIDTH	HEIGHT	UNDG	Class	Shipping Name	
1	CTN	15.000 KG	0.027 M3	30	30	30 CM				
1		15.000 KG	0.027 M3							<-- Totals

Quotation Details

			Quote Currency
Cartage Origin	65.00 AUD		65.00 AUD
Marking, Handling & Labelling Origin	55.00 AUD		55.00 AUD
Built Sepio 5-1.72LS (2-8 & -20 Degrees)	45.00 AUD		45.00 AUD
Agency/Consultation Fee	65.00 AUD		65.00 AUD
1 X Mirror sent to the USA - Temp Sensistive shipment			
Sub-total (AUD)	**230.00**		
Freight	228.17 USD	@0.702050	325.00 AUD
Sub-total (USD)	**228.17**		
TOTAL CHARGES:	**AUD**	**555.00**	

Please note that this Quotation is only applicable to the shipment defined under "Shipment Information". This Quotation will be deemed invalid after this shipment has been processed.

Any foreign currency conversions have been undertaken using current exchange rates and thus local currency charges are subject to change.

DRAFT

17. Procurement

The prototype T-SAMS was manufactured in-house in Adelaide and through WB-Tooling using the AutodeskCAD model. The test fit prototype will be procured through Element Precision. Resistors to be ordered from Barry Industries

Prototype T-SAMS Actuator D2000275 (excluding fasteners)

Description:	Mirror	Actuation ring	Spacer	Heaters	Thermistor	Wiring	Struts	Manifold	Housing	Counterbalance
DCC#:		D2000268	-	D2000273	-		D2000269	D2000270	D2000271	D2000472

supplier/manufacturer	Thorlabs	UOFA	UOFA	Barry Industries	Amphenol	UOFA	UOFA	WB Tooling	WB Tooling	WB Tooling
Quantity per assembly	1	1	4	4	1	-	4	1	1	1
Unit Price (AUD)		450	-			Existing stock	60	190	210	120
Comments			Integrated with D2000268		SC30F103 W NTC 10KOHM 3969K					

Fit check T-SAMS Actuator D2000275

Description:	Mirror	Actuation ring	Heaters	Thermistor	Wiring	Struts	Manifold	Housing	Counterbalance
DCC#:	TBD	D2000268	D2000273	-		D2000269	D2000270	D2000271	D2000472
Supplier	TBD	Element Precision	Barry Industries	Amphenol	TBD	Element Precision	Element Precision	Element Precision	Element Precision
Quantity per assembly	1	1	4	1	-	4	1	1	1
Unit Price (AUD)	TBD	TBD			TBD	TBD	TBD	TBD	TBD
Comments			RA2000-20-8X 25 Ohm	SC30F103 W NTC 10kOhm 3969K					

Fit check T-SAMS thermal shield

Description:	Shield Front	Shield Left	Shield Right
DCC#:	D2000272	D2000268	D2000277
Supplier	Element Precision	Element Precision	Element Precision
Quantity per assembly	1	1	4
Unit Price (AUD)	TBD	TBD	TBD

Comments			

Resistors procurement, 8 week lead time



Barry Industries, Inc.
60 Walton Street
Attleboro, MA 02703
Tel:+1(508)226-3350
FAX: +1(508)226-3317
www.barryind.com

Sales Order Acknowledgment

Sales Order ID: SO163026
Customer Purchase Order ID: CREDIT CARD ORDER
Page Number: Page 1 of 1
Quote Number: QU11426

Bill To : University Of Adelaide
Level 3 50 Rundle Mall Plaza
Adelaide, SA 5005
Australia

Customer ID: C4342
Change Nbr: 0
Change Date: 1/18/2021

Order Date: 1/18/2021 9:23:14 AM
Partial Ship: No
Buyer: HUY TUONG CAO

FOB: Attleboro
Currency Type : USD
AR Terms: Credit Card
Prepayment Terms:

Ship To : University Of Adelaide
G15,Physics Bldg
School of Physical Science
Adelaide, SA 5005
Australia

Contact Name: Huy Tuong Cao
Contact Phone: **ext:**
Contact Fax: **ext:**

Ship To Phone: 83139930 **ext:**
Ship To FAX: 83139930

Line Nbr / Cust Ln Nbr	Item ID / Item Name	Promised Ship Date	Req Qty	Unit Price / Unit of Measure		Extended Price
1 / 1	RA25R0-20-8X / Flanged Resistor--RoHS Compliant	3/15/2021	40	$15.0000 / each	BeO free	$600.00

Ship Method: UPS-W.W. Express Collect

Line Item Total: $600.00

Total: $600.00

18. Production

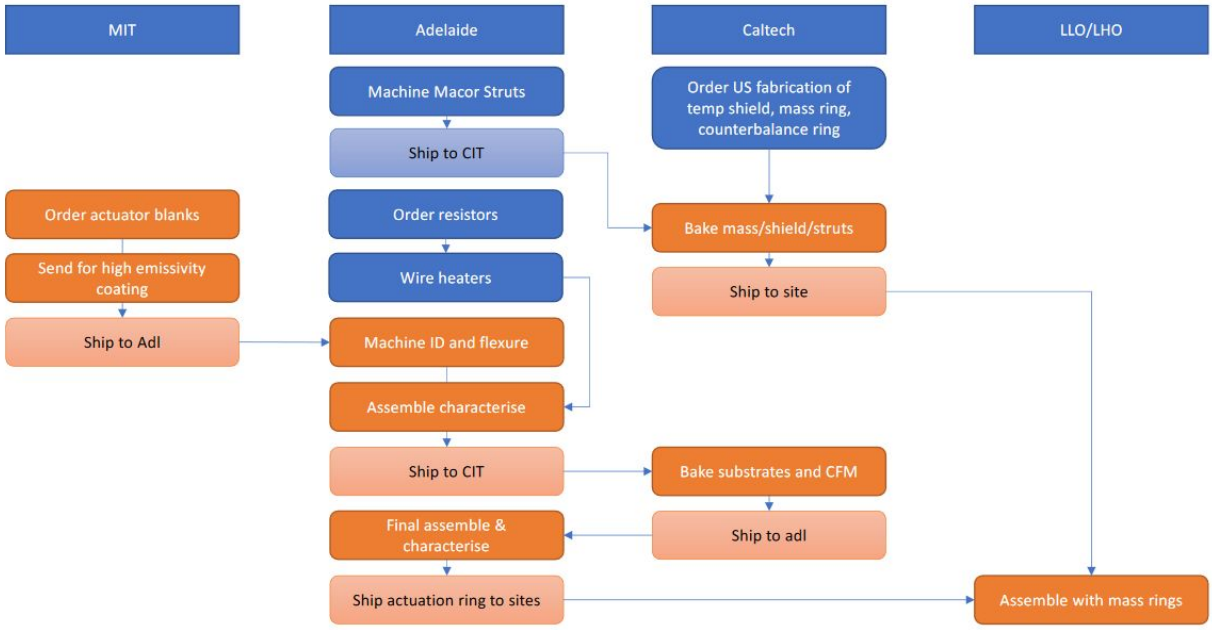

Final OM2 production:

1.
    a. Procure 20 actuating ring blanks and thermal shield parts from Element Precision (no flexure and smaller ID)
    b. Procure resistors from Barry Industries to ship to CIT
2. Mirror inspection at MIT (Q2000022) and shipping to Adelaide
3. Actuator ring specifications:
    - Specifying actuating ring ID and tolerance
    - Complete one drawing for each actuator-flexure assembly
4. High emissivity coating at Plasma-Tech (CIT)
    - Coat actuator blanks with aluminum oxide
    - Coat inner non-contact surfaces of the thermal shield components
5. Shipping of actuator blanks to Adelaide
6. Fabrication of other components:
    a. Adelaide:
        i. Actuator ring (flexure + correct ID ID)
        ii. Macor struts
    b. Element Precision:
        i. Body
        ii. Counterbalance ring

7. Assemble actuator sub-assembly and test static load + actuation range + higher-order-scattering loss (Adelaide)
    a. If static load + actuation range meets requirement, proceed to step 8
    b. If it does not meet, adjusting ID of actuator ring design, fabricate new one with spare blank, re-test
8. Disassemble the actuator sub-assembly and shipping the actuator ring, mirror to (MIT/CIT?)
9. Clean and bake all components of the T-SAMS (MIT/CIT?)
10. Final assembly of the T-SAMS unit (MIT/CIT?)
11. Wiring heaters to the T-SAMS (MIT/CIT?)
12. Test preload curvature with ZYGO (CIT)
    - Note: A HWS can potentially set up at CIT to verify the actuation range after the final assembly to verify actuation range
13. Ship to sites

19. To-Do list

- Perform mechanical fit check with the HDS as soon as possible
- Specify a detailed clean/bake /handling procedure for all components during fabrication/ assembly
- Verify vacuum compatibility of heater resistors
- Verify point of contact at LIGO Lab for the final stage of assemblies and testing
- Measure mirrors used for OM2
- Identify optimal ultra-low profile fasteners for T-SAMS actuator ring, struts and manifold
- Compute required ID of actuating ring for each mirror given measured OD and required actuation range
- Procure actuating rings (20 units)
- Doing assembly drawing
- Prototype assembly completed in Adelaide with Autodesk model. Adapt model + drawings to Solidworks.
- Fabricate prototype from updated design with Element Precision

20. FDR Documentation checklist

From M1500263-v3, Guidelines for Advanced LIGO Detector Improvement (DI) Project Review(s)

Document #	Section	Checklist Item

T1800480	2	System Design Requirements, especially any changes or refinements from DRR
E2000274	all	Preliminary Design Document, summarizing the design and pointing to other documents
T2000244	4	Justification that the design can satisfy the functional and performance requirements
T2000244		• Subsystem block and functional diagrams
-	9	• Equipment layouts (including cabling, feedthrough, stray light and viewport considerations.)
E1900359, D2000267 for Thermal E1900350, D1900092 for Piezo		• Document tree and preliminary drawings (information issued)
E2000274	6,8	• Modeling, test, and simulation data
E2000274	5, 12	• Thermal and/or mechanical stress aspects
-	11	• Vacuum aspects
-	5,11	• Material considerations and selection
-	10,12	• Environmental controls and thermal design aspects
T2000244		• Software and computational design aspects

-	9	• Power distribution and grounding
-	9	• Electromagnetic compatibility considerations
T2000244		• Fault Detection, Isolation, & Recovery strategy
		Resolution to action items from DRR
	2	Interface control documents (as well as identifying any changes to pre-existing interface documents/definition)
		Relevant RODA changes and actions completed
		Instrumentation, control, diagnostics design approach
		Fabrication and manufacturing considerations
		Instrumentation, control, diagnostics design approach
		Preliminary reliability/availability issues
To be done by the FDR Summarized in for PDM Assembly:		Assembly procedure
-		Installation and integration plan
		Environment, safety, and health issues
		• Mitigation of personnel and equipment safety hazards; refined Hazard Analysis
		• Reflected in equipment design and procedures for use

-		Human resource needs, cost and schedule
-		Any long-lead procurements
-		Technical, cost & schedule risks and planned mitigation
		Test plan overview
		Planned tests or identification of data to be analyzed to verify performance
-		• In prototyping phase
		• In production/installation/integration phase
		Identification of testing resources
-		• The test equipment required for each test adequately identified
		• Organizations/individuals to perform each test identified
		• QA involvement
		Test and evaluation schedule, prototype and production
		Revised Failure Modes and Effects Analysis (FMEA) (bottom-up approach based on design)
-		Risk Registry items discussed
-		Lessons learned documented, circulated
-		Problems and concerns

APPENDIX: HAM 6 O4 layout
26: OM2 (HTDS)
Extracted from D1800027

