NOTES CONTINUED:

REV.	DATE	DCN #	DRAWING TREE #
v3	11 JAN 2022	-	-
v4	18 JAN 2022	-	-
v5	20 JAN 2022	-	-

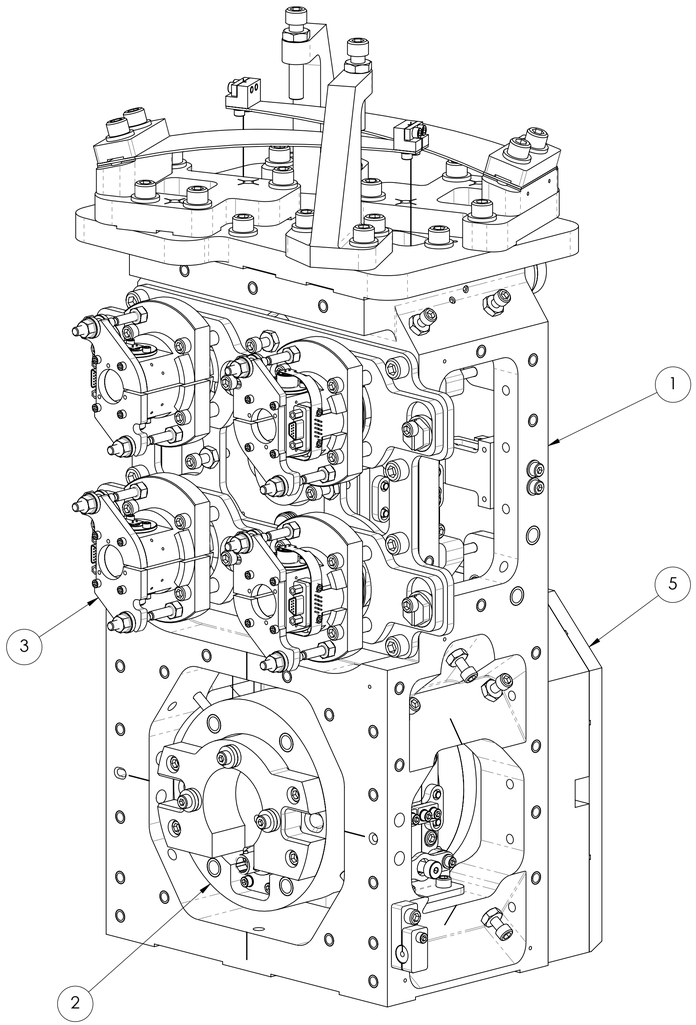

COMPLETED ASSEMBLY

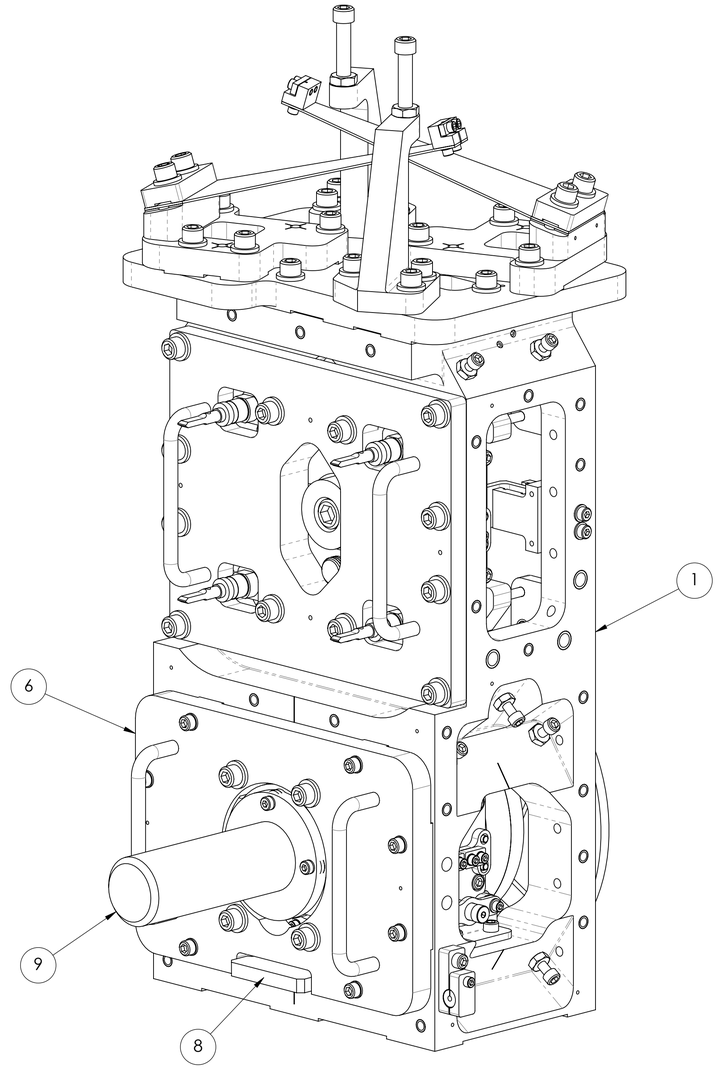

ASSEMBLY WITH TOOLING

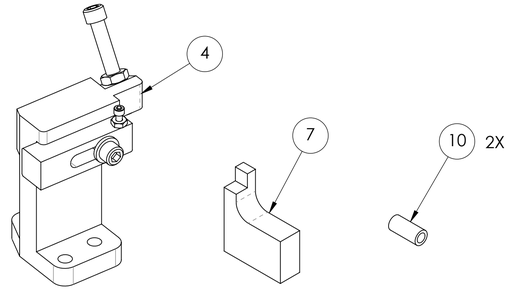

ADDITIONAL TOOLING

ITEM NO.	PART NUMBER	DESCRIPTION	MATERIAL	REQ
23	Calif. Fine Wire Co. #CFW2050640	A+, SUS, HDS Bottom Wire, .004" Diameter (E1100187)	STEEL MUSIC WIRE	26 in.
22	Calif. Fine Wire Co. #CFW2014632	A+, SUS, HDS Top Wire, .008" Diameter (E1100187)	STEEL MUSIC WIRE	13 in.
21	D2200018	A+, SUS, HTDS Bottom Cable Mount Assy	N/A	1
20	D2100737	A+, SUS, HDS Damper Assy	N/A	2
19	UC COMPONENTS #N-832 (OR EQUIVALENT)	HEX NUT, #8-32	300 SSTL	8
18	UC COMPONENTS #WF-08 (or equivalent)	WASHER, FLAT, #8 (NAS 620-C8 OR EQUIVALENT)	300 SSTL	8
17	McMASTER-CARR #98017A660 (OR EQUIVALENT)	WASHER, FLAT, 1/4 (NAS 1149-C416 OR EQUIVALENT)	300 SSTL	4
16	McMaster-Carr 90298A154 Or Equivalent	SCREW, SHOULDER, 8-32, .188 X .625 LG	18-8 SSTL	2
15	UC COMPONENTS #C-608-N (or equivalent)	SCREW, SOCKET HEAD CAP, #6-32 UNC-2A X 0.5 LONG, FULLY THREADED	300 SSTL	3
14	UC COMPONENTS #C-814-N (OR EQUIVALENT)	SCREW, SOCKET HEAD CAP, #8-32 UNC-3A X 0.875 LONG, FULLY THREADED	300 SSTL	8
13	UC COMPONENTS #CFT-832-N (OR EQUIVALENT)	SCREW, SOCKET HEAD CAP, #8-32 UNC-3A X 2 LONG, FULLY THREADED	300 SSTL	8
12	UC COMPONENTS #C-2010-N (OR EQUIVALENT)	SCREW, SOCKET HEAD CAP, 1/4-20 UNC-3A X 0.625 LONG, FULLY THREADED	300 SSTL	8
11	UC COMPONENTS #C-2016-N (OR EQUIVALENT)	SCREW, SOCKET HEAD CAP, 1/4-20 UNC-3A X 1 LONG, FULLY THREADED	300 SSTL	4
10	D2100628	A+, SUS, HDS Bottom Mass EQ Stop Bushing	6061-T6 Al	2
9	D2100549	A+, SUS, HTDS Bottom Mass Handle	6061-T651 Al	1
8	D2100544	A+, SUS, HTDS Bottom Mass Spacer	PFA440 HP (PRESHRUNK)	1
7	D2100530	A+, SUS, HDS Blade Height Gauge	6061-T6 Al	1
6	D2100537	A+, SUS, HTDS Bottom Mass Fixture Assy	N/A	1
5	D2100505	A+, SUS, HDS Thermal SAMS Shield Assy	N/A	1
4	D2100504	A+, SUS, HDS Adjustable Blade Guard Assy	N/A	1
3	D2000457	A+, SUS, HDS BOSEM Cam Adj Mtg Assy	N/A	1
2	D2000275	A+, SUS, HDS Thermal SAMS Bottom Mass Assy	N/A	1
1	D1900352	A+, SUS, HDS Assy (Basic)	N/A	1

PARTS LIST

NOTES AND TOLERANCES: (UNLESS OTHERWISE SPECIFIED)

DIMENSIONS ARE IN INCHES

TOLERANCES:
.XX ±
.XXX ±

ANGULAR ± °

1. INTERPRET DRAWING PER ASME Y14.5-1994.
2. DO NOT SCALE FROM DRAWING.

MATERIAL: N/A
FINISH: N/A µinch

LIGO CALIFORNIA INSTITUTE OF TECHNOLOGY MASSACHUSETTS INSTITUTE OF TECHNOLOGY

SYSTEM: A+
SUB-SYSTEM: SUS
NEXT ASSY: D2100718, D2100731

PART NAME: A+, SUS, HTDS Assy (Thermal SAMS)

DESIGNER	D. GRIFFITH	30 SEP 2020	
DRAFTER	D. GRIFFITH	02 NOV 2021	
CHECKER	SEE DCC	SEE DCC	
APPROVAL			

SIZE: D
DWG. NO.: D2000474
REV.: v5
SCALE: 3:4
PROJECTION:
SHEET 1 OF 7

PART PDM VERSION: y-042
DWG PDM VERSION: y-010
D2000474 A+, SUS, HTDS Assy (Thermal SAMS)

ASSEMBLY STEP 1:
FIXTURE PLATE AND SPACER FOR BOTTOM MASS

1. SEE SHEET 1 FOR BOM.

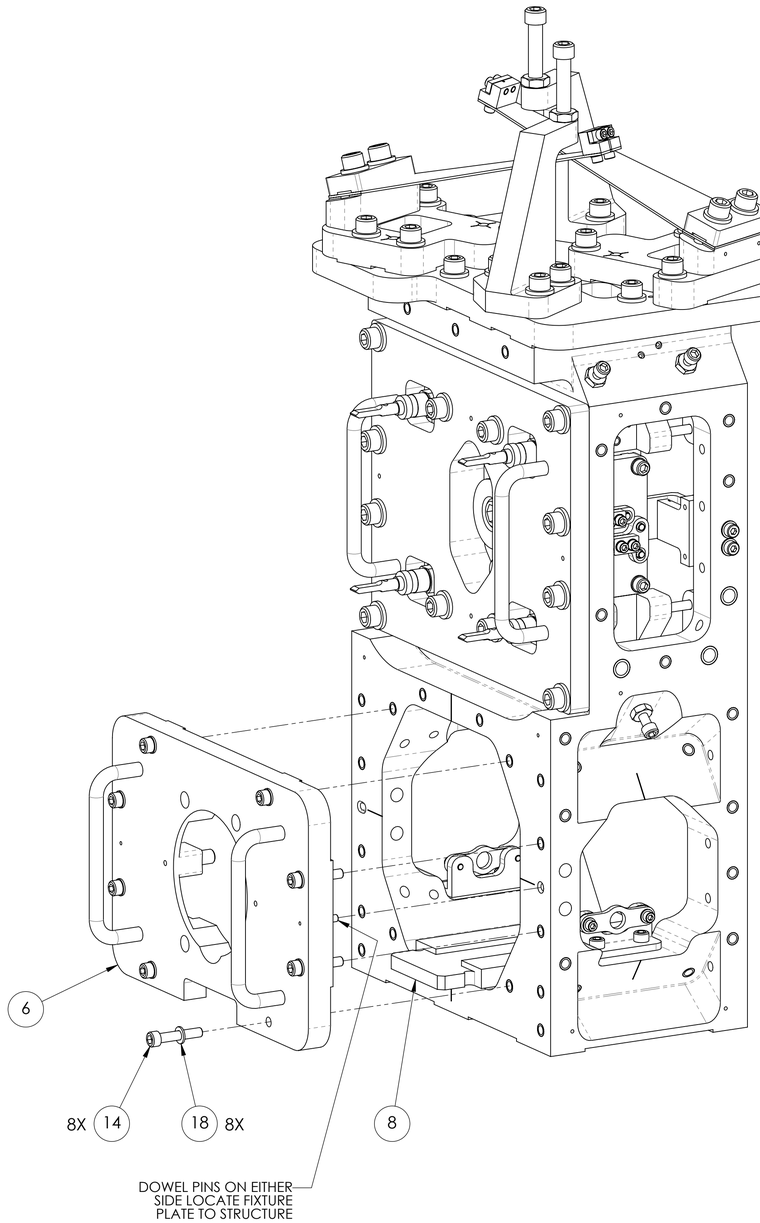

ASSEMBLY STEP 2:
ATTACH TEMPORARY HANDLE TO BOTTOM MASS ASSY

1. SEE SHEET 1 FOR BOM.

2 REMOVE SCREWS AND SPACERS. THESE WILL BE RE-INSTALLED AFTER BOTTOM MASS IS FIXTURED INTO THE STRUCTURE.

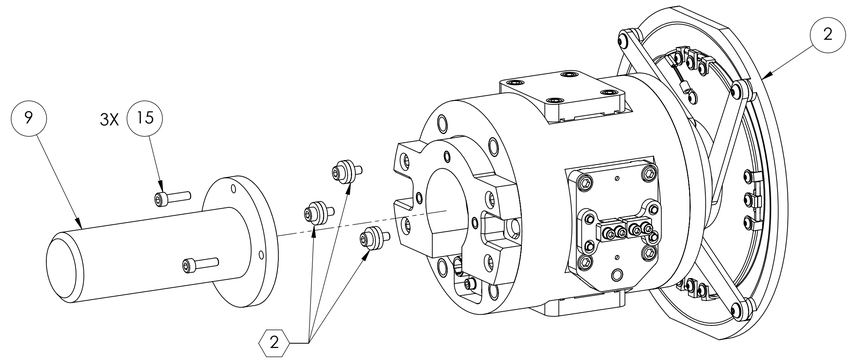

ASSEMBLY STEP 3:
INSTALL BOTTOM MASS ASSY INTO STRUCTURE

1. SEE SHEET 1 FOR BOM.

2 BEFORE TIGHTENING FOUR SCREWS, ENSURE LARGE DOWEL PINS IN FIXTURE PLATE ARE FULLY INSERTED INTO HOLE AND SLOT IN BOTTOM MASS.

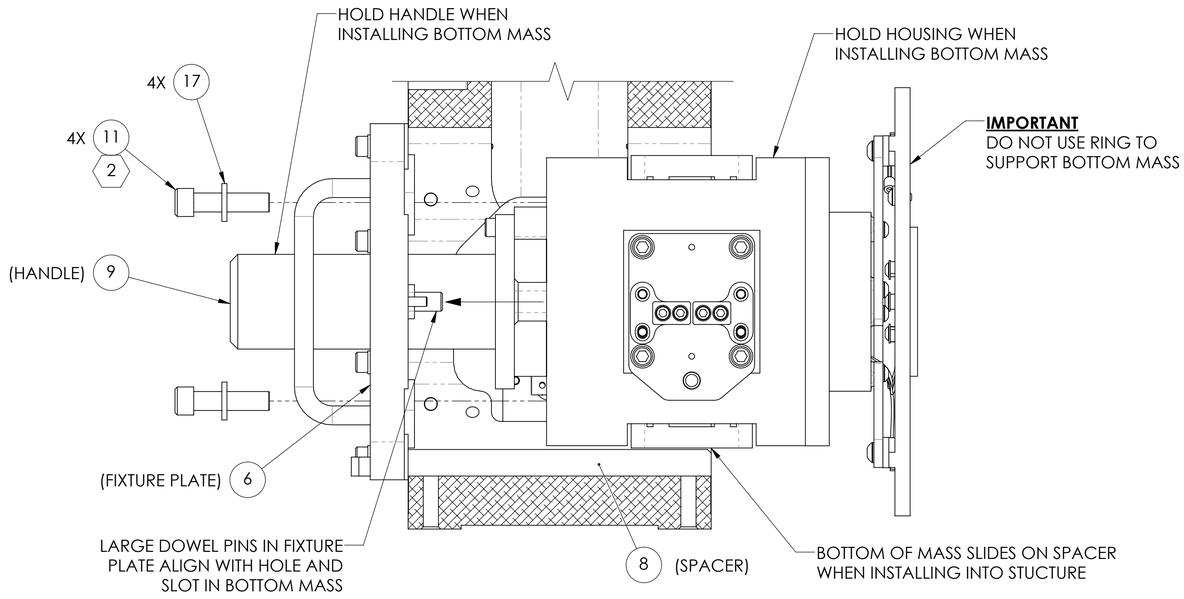

SIDE VIEW
(SECTION THRU STRUCTURE)

LIGO	CALIFORNIA INSTITUTE OF TECHNOLOGY MASSACHUSETTS INSTITUTE OF TECHNOLOGY	
SIZE D	DWG. NO. D2000474	REV. v5
SCALE: 3:4	PROJECTION:	SHEET 2 OF 7

PART PDM VERSION: v-042
DWG PDM VERSION: v-010
D2000474 A+, SUS, HTDS Assy (Thermal SAMS)

ASSEMBLY STEP 4:
INSTALL BOTTOM EQ STOPS AND BUSHINGS

1. SEE SHEET 1 FOR BOM.
2. MOUNTING SCREWS FOR PLATE SHOULD BE LOOSE BEFORE INSTALLING BUSHING (ITEM 10) AND SHOULDER SCREW (ITEM 16).
3. INSTALL BUSHING (ITEM 10) INTO HOLE IN PLATE. INSTALL SHOULDER SCREW THROUGH BUSHING AND SCREW INTO TAPPED HOLE IN BOTTOM MASS. FULLY TIGHTEN SHOULDER SCREW INTO BOTTOM MASS.
4. FULLY TIGHTEN PLATE MOUNTING SCREWS.
5. REMOVE HANDLE (ITEM 9) AND SCREWS (ITEM 15). REPLACE SCREWS AND SPACERS THAT WERE REMOVED FROM BOTTOM MASS IN STEP 2.

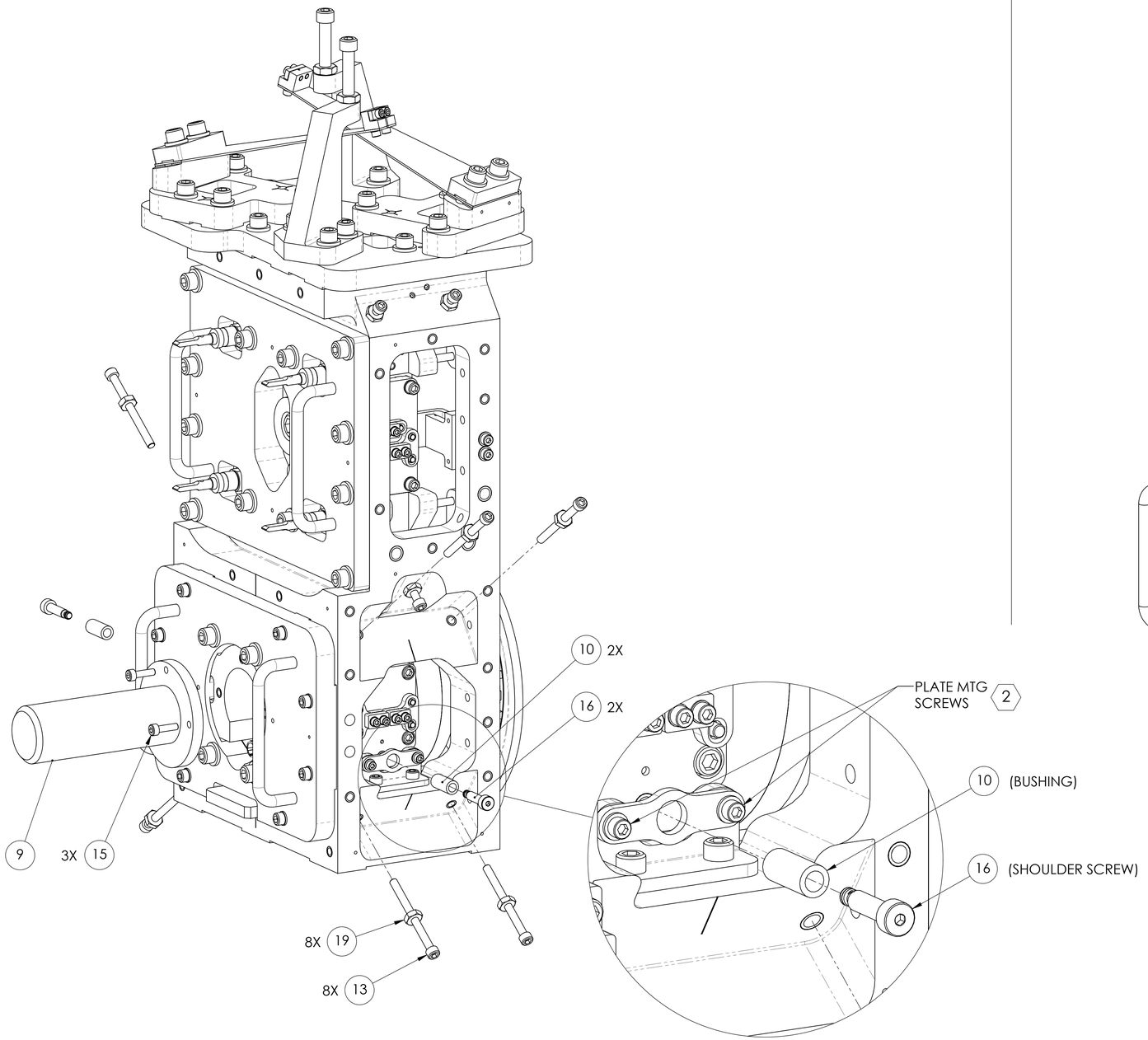

ASSEMBLY STEP5:
BOLT THERMAL SHIELD TO STRUCTURE

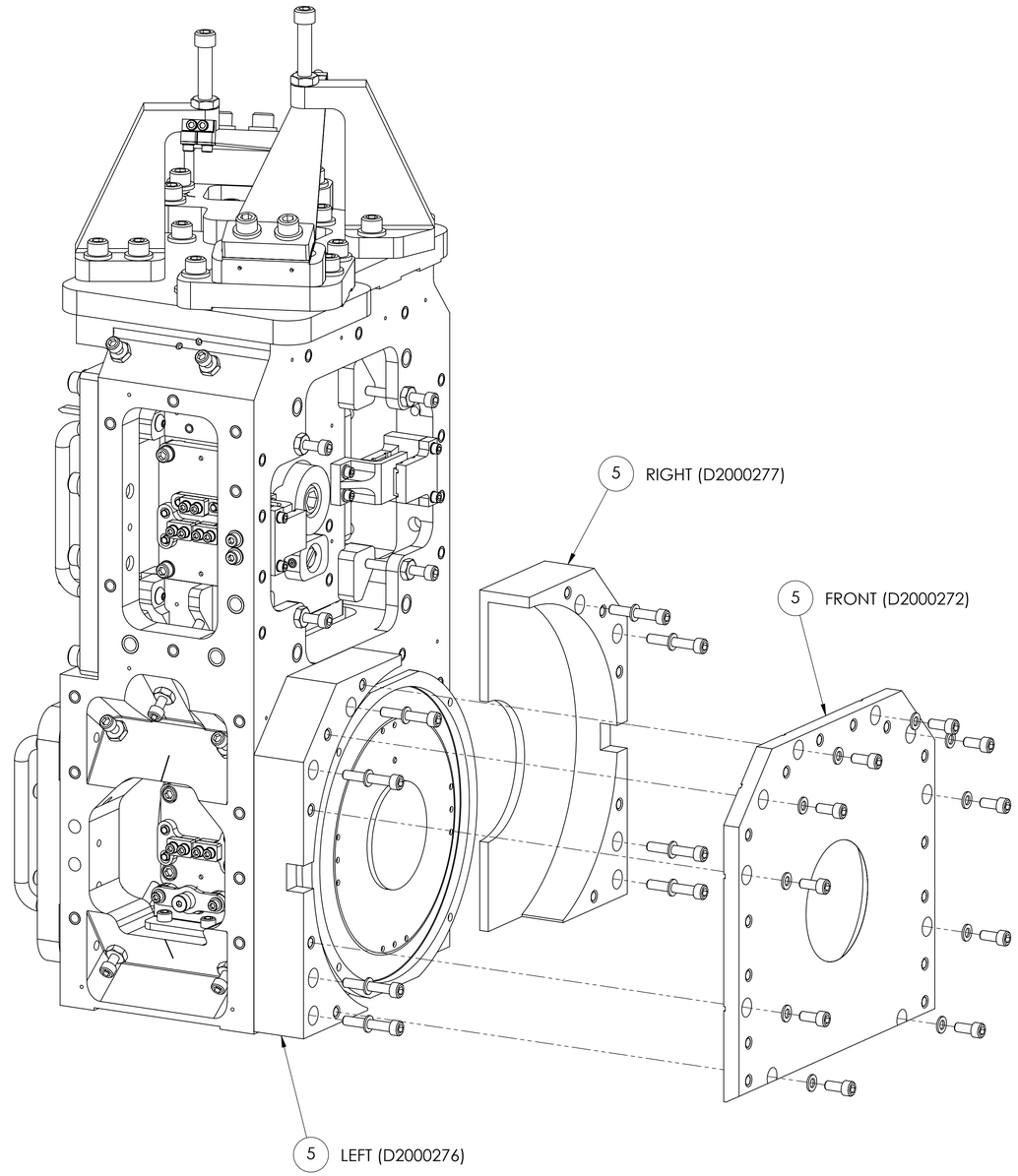

LIGO	CALIFORNIA INSTITUTE OF TECHNOLOGY MASSACHUSETTS INSTITUTE OF TECHNOLOGY	
SIZE: D	DWG. NO.: D2000474	REV.: V5
SCALE: 3:4	PROJECTION:	SHEET 3 OF 7

PART PDM VERSION: v042
DWG PDM VERSION: v010
D2000474 A+, SUS, HTDS Assy (Thermal SAMS)

ASSEMBLY STEP 6:
SETTING BLADE SPRING HEIGHT

1. SEE SHEET 1 FOR BOM.

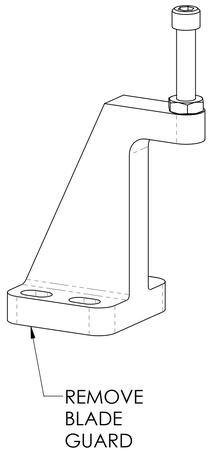

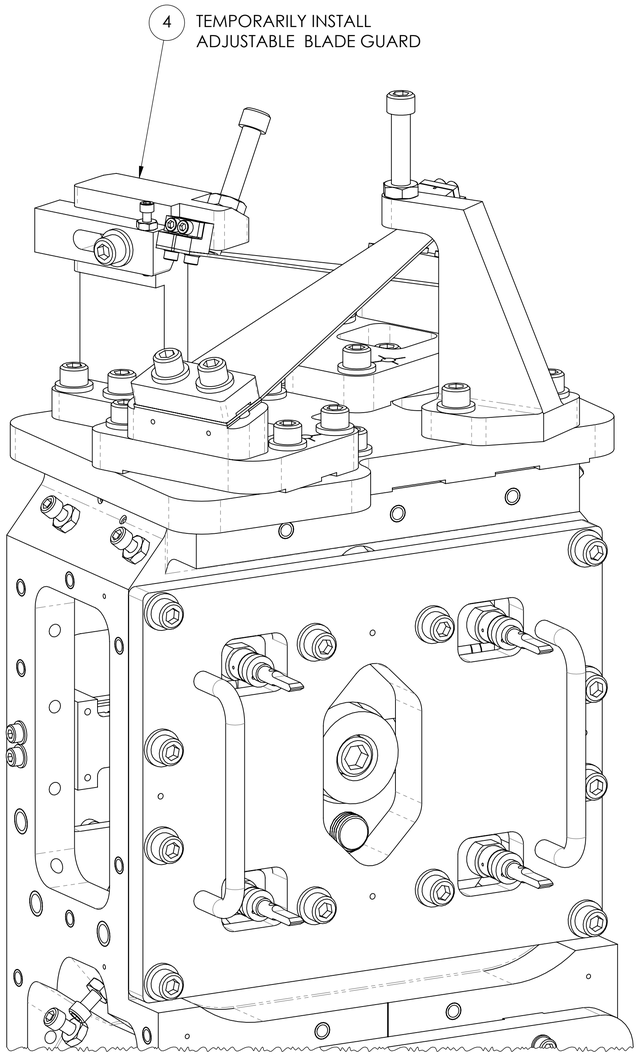

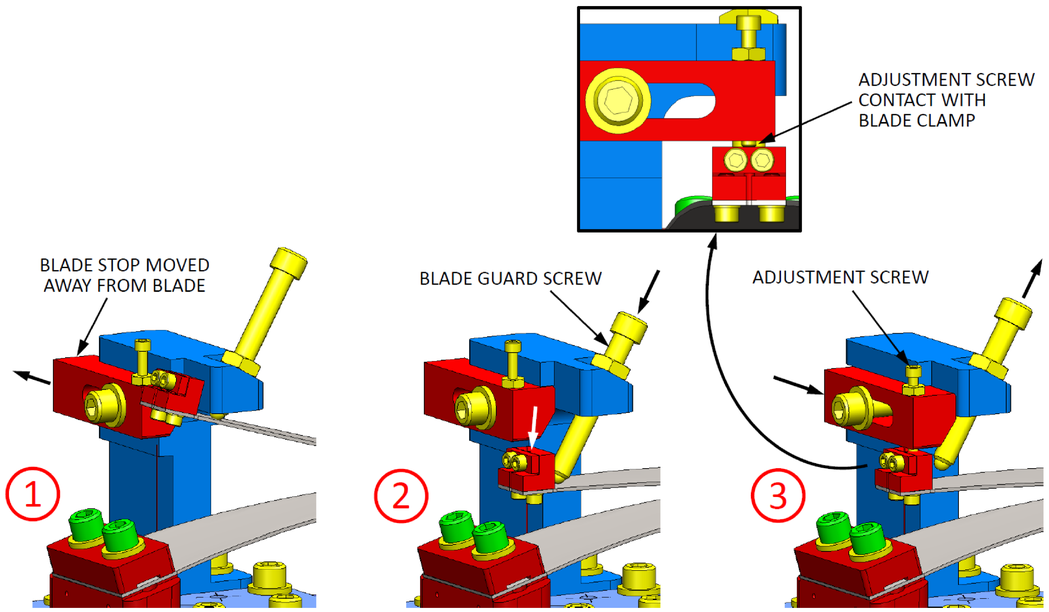

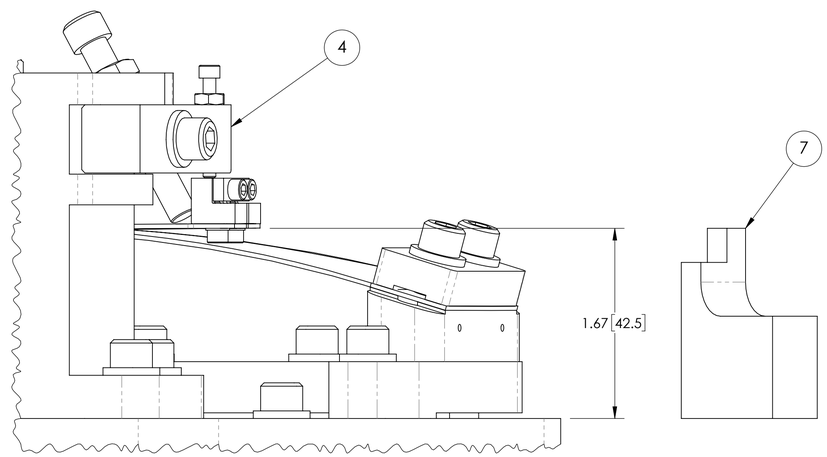

DISTANCE FROM TOP PLATE SURFACE TO BOTTOM SURFACE OF BLADE SPRING

LIGO CALIFORNIA INSTITUTE OF TECHNOLOGY
MASSACHUSETTS INSTITUTE OF TECHNOLOGY

SIZE	DWG. NO.	REV.
D	D2000474	v5
SCALE: 1:1	PROJECTION:	SHEET 4 OF 7

PART PDM VERSION: y-042
DWG PDM VERSION: y-010
D2000474 A+, SUS, HTDS Assy (Thermal SAMS)

ASSEMBLY STEP 7:
SUSPENSION WIRE

1. SEE SHEET 1 FOR BOM.

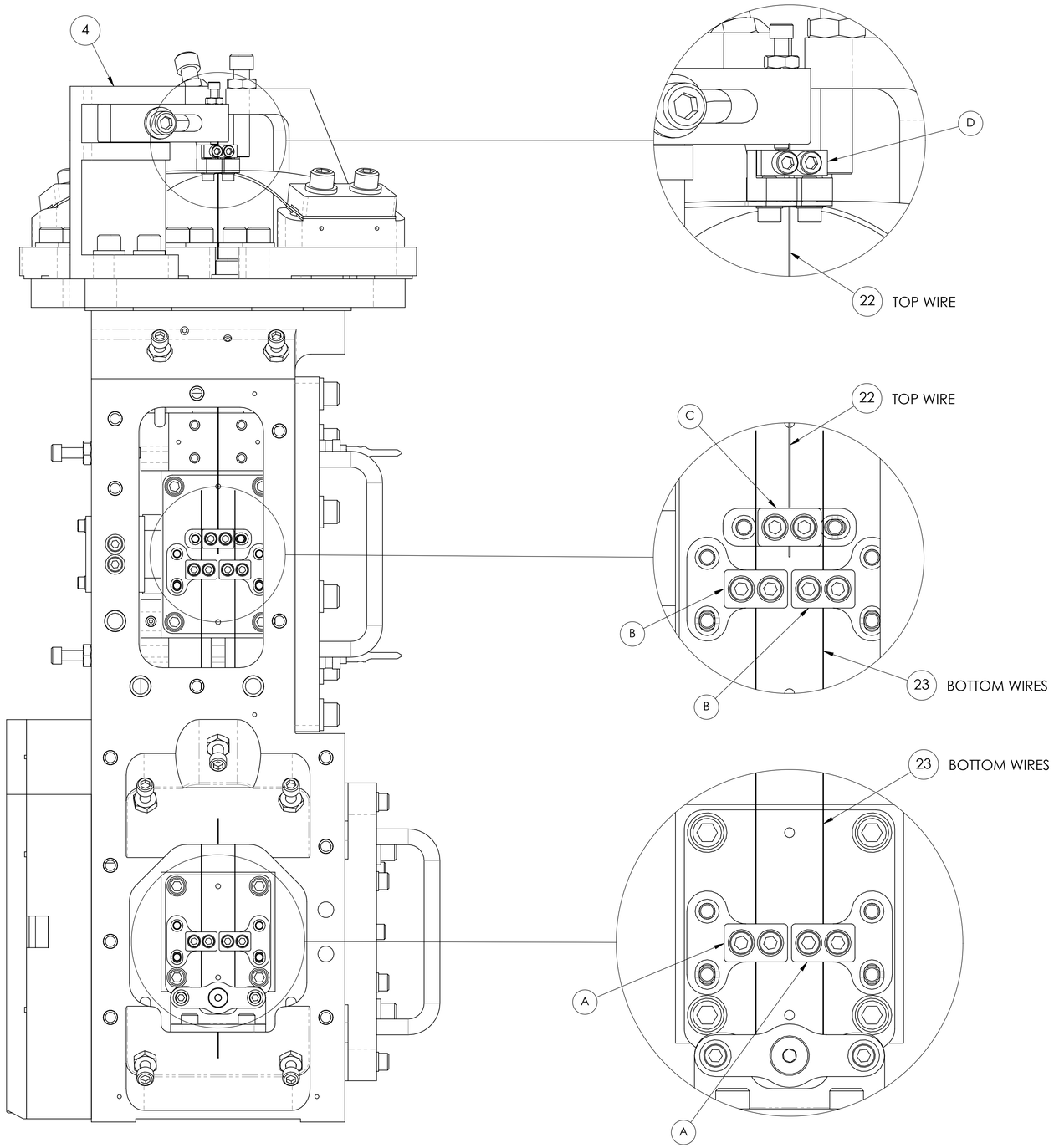

INSTALLATION PROCEDURE FOR SUSPENSION WIRES

WIRE CLAMPS USED:

(A) BOTTOM WIRE CLAMP ON HTDS BOTTOM MASS

(B) BOTTOM WIRE CLAMP ON INTERMEDIATE MASS

(C) TOP WIRE CLAMP ON INTERMEDIATE MASS

(D) TOP WIRE CLAMP ON TOP BLADE SPRING

WIRE LENGTHS: BOTTOM = 6.50", TOP = 6.50"

1. TOP BLADE HEIGHT SHOULD BE SET USING THE ADJUSTABLE BLADE GUARD (ITEM 4).

2. CENTER BOTTOM WIRE BETWEEN SCREWS IN 'B' CLAMP AND MAKE SURE WIRE IS HANGING VERTICAL (PERPENDICULAR TO HORIZONTAL SURFACE OF CLAMP). TIGHTEN 'B' CLAMP SCREWS TO SECURE WIRE.

3. ROUTE THE OTHER END OF THE BOTTOM WIRE THROUGH THE 'A' CLAMP. SCREWS FOR THE 'A' CLAMP SHOULD NOT BE FULLY TIGHTENED YET. APPLY TENSION TO WIRE BY PULLING DOWN ON THE BOTTOM END WITH A PAIR OF PLIERS. MAKE SURE WIRE IS CENTERED IN 'A' CLAMP AND TIGHTEN SCREWS WHILE CONTINUING TO APPLY TENSION. REPEAT PROCESS FOR THE OTHER BOTTOM WIRE.

4. CENTER BOTTOM END OF TOP WIRE BETWEEN SCREWS IN THE 'C' CLAMP AND MAKE SURE WIRE IS VERTICAL (PERPENDICULAR TO HORIZONTAL SURFACE OF CLAMP). TIGHTEN 'C' CLAMP SCREWS TO SECURE WIRE.

5. ROUTE THE OTHER END OF THE TOP WIRE THROUGH THE 'D' CLAMP. SCREWS FOR THE 'D' CLAMP SHOULD NOT BE FULLY TIGHTENED YET. APPLY TENSION TO WIRE BY PULLING UP ON THE TOP END WITH A PAIR OF PLIERS. MAKE SURE WIRE IS CENTERED IN 'D' CLAMP AND TIGHTEN SCREWS WHILE CONTINUING TO APPLY TENSION.

6. CUT OFF EXCESS WIRE ENDS FROM BOTTOM AND TOP WIRES.

7. REMOVE ADJUSTABLE BLADE GUARD AND RE-INSTALL ORIGINAL BLADE GUARD.

8. REPEAT PROCESS FOR WIRES ON THE OPPOSITE SIDE OF THE STRUCTURE.

LIGO CALIFORNIA INSTITUTE OF TECHNOLOGY
MASSACHUSETTS INSTITUTE OF TECHNOLOGY

SIZE	DWG. NO.	REV.
D	D2000474	v5

SCALE: 1:1 | PROJECTION: | SHEET 5 OF 7

PART PDM VERSION: y-042
DWG PDM VERSION: y-010
D2000474 A+, SUS, HTDS Assy (Thermal SAMS)

ASSEMBLY STEP 8:
REMOVING INTERMEDIATE MASS FIXTURE AND INSTALLING BOSEM ASSEMBLY

1. SEE SHEET 1 FOR BOM.
2. LOCATE THE 10 EQ STOP SCREWS FOR THE INTERMEDIATE MASS AND SCREW THEM IN UNTILL THEY MAKE CONTACT WITH THE INTERMEDIATE MASS.
3. REMOVE THE INTERMEDIATE MASS TOOLING FIXTURE PLATE.
4. REMOVE THE 4 BOSEM's FROM THE BOSEM ASSEMBLY (ITEM 3). INSTALL THE BOSEM ASSEMBLY ONTO THE STRUCTURE. RE-INSTALL THE BOSEM's ONE AT A TIME MAKING SURE THE FLAG/MAGNET ASSEMBLIES ARE CENTERED IN THE BOSEM. USE THE CAM ADJUSTMENT MECHANISM TO CENTER THE BOSEM ON THE FLAG/MAGNET ASSEMBLIES.
5. SCREW IN THE 4 EQ STOP SCREWS ON THE BOSEM ASSEMBLY UNTILL THEY MAKE CONTACT WITH THE INTERMEDIATE MASS.

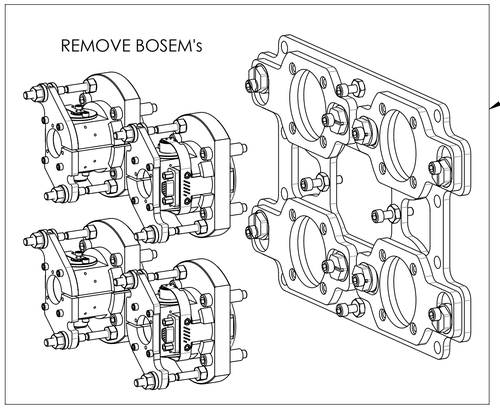

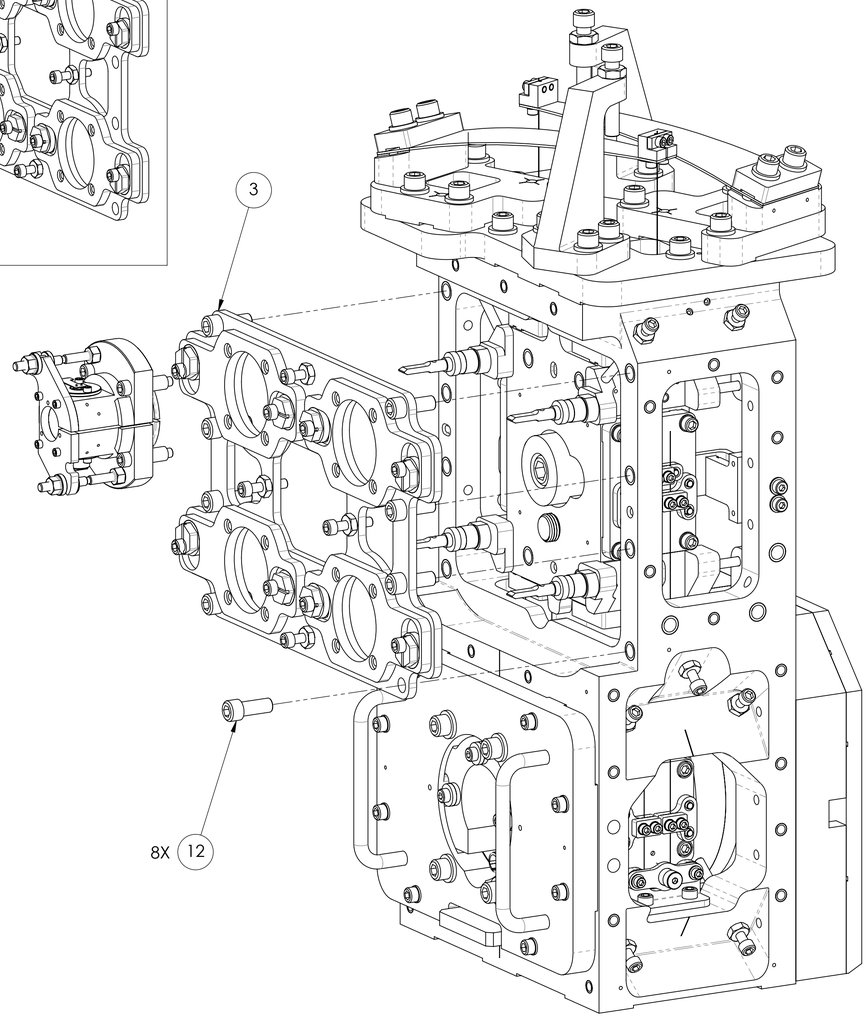

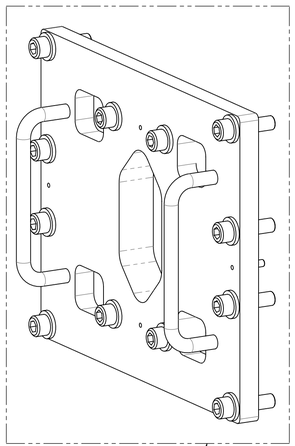

ASSEMBLY STEP 9:
REMOVING BOTTOM MASS TOOLING

1. SEE SHEET 1 FOR BOM
2. LOCATE THE 8 EQ STOP SCREWS FOR THE BOTTOM MASS AND SCREW THEM IN UNTILL THEY MAKE CONTACT WITH THE BOTTOM MASS.
3. REMOVE THE BOTTOM MASS TOOLING FIXTURE ASSEMBLY (ITEM 6) AND IT'S MOUNTING SCREWS AND WASHERS, AND SPACER (ITEM 8).
** THE BOTTOM AND INTERMEDIATE MASSES ARE STILL FIXED INTO THE STRUCTURE **

TO SUSPEND THE MASSES:
a) REMOVE SHOULDER SCREWS (ITEM 16) AND BUSHINGS (ITEM 10) FROM BOTTOM MASS.
b) RE-INSTALL SHOULDER SCREWS INTO BOTTOM MASS.
c) BACK OUT ALL EQ STOP SCREWS FOR THE INTERMEDIATE MASS (14 PLACES) AND THE BOTTOM MASS (8 PLACES).

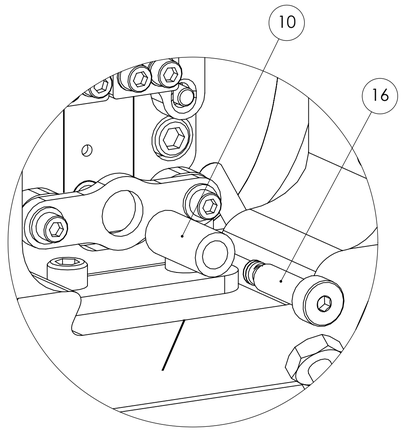

DETAIL E
(BOTTOM MASS BUSHING)

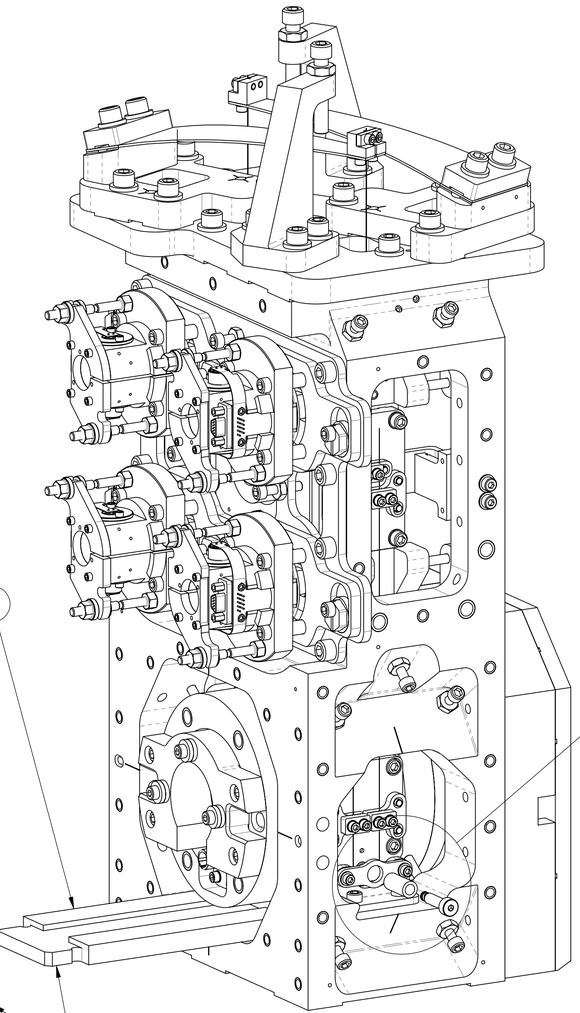

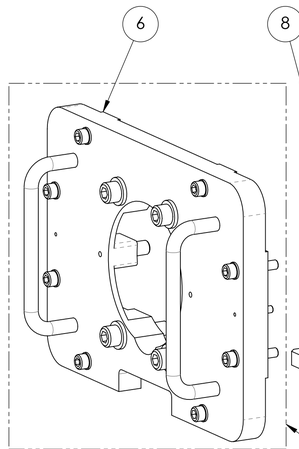

LIGO	CALIFORNIA INSTITUTE OF TECHNOLOGY MASSACHUSETTS INSTITUTE OF TECHNOLOGY	
SIZE: D	DWG. NO.: D2000474	REV.: v5
SCALE: 3:4	PROJECTION:	SHEET 6 OF 7

PART PDM VERSION: y-042
DWG PDM VERSION: y-010
D2000474 A+, SUS, HTDS Assy (Thermal SAMS)

ASSEMBLY STEP 10:
INSTALL 2 DAMPER ASSEMBLIES TO STRUCTURE

1. SEE SHEET 1 FOR BOM.

2. REFER TO LIGO D2100737 FOR INSTALLATION PROCEDURE.

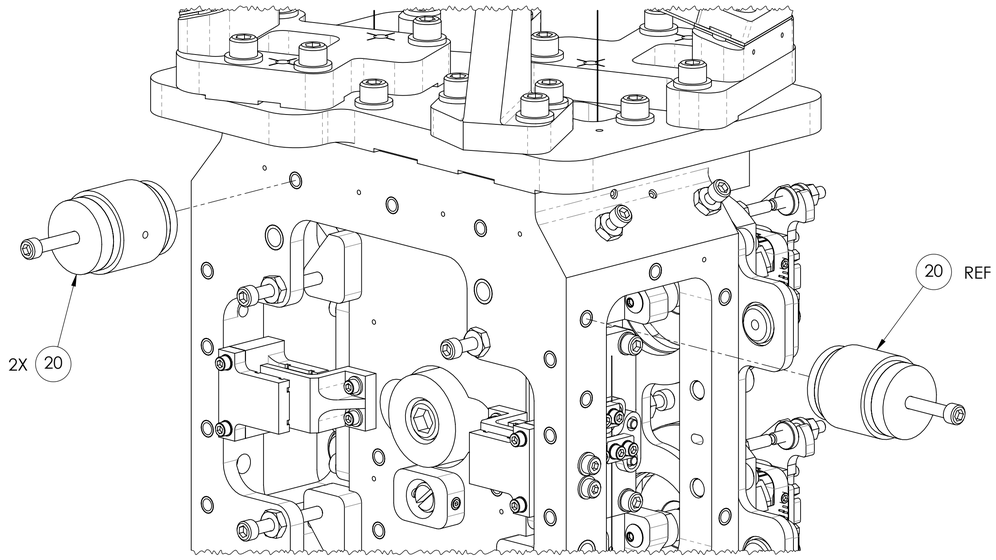

ASSEMBLY STEP 11:
INSTALL CABLE MOUNT ASSEMBLY TO STRUCTURE

1. SEE SHEET 1 FOR BOM.

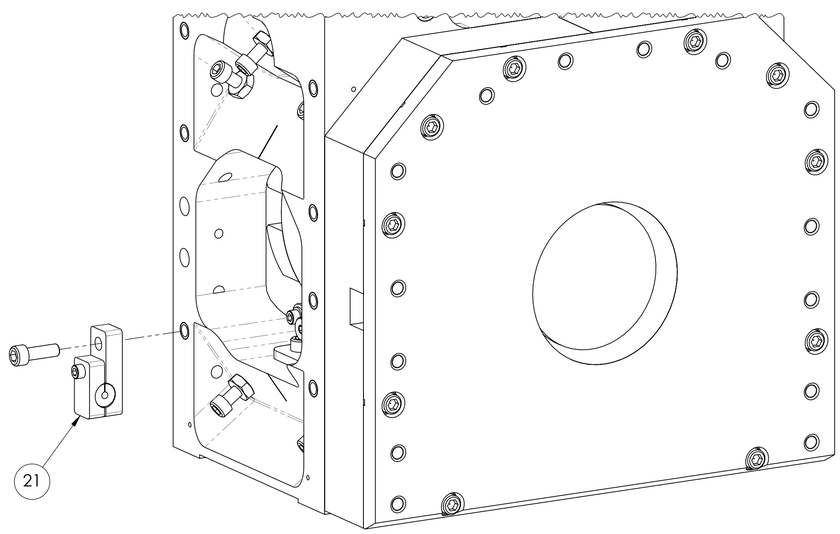

ASSEMBLY STEP 12:
CHECKING VERTICAL POSITION OF SUSPENDED BOTTOM MASS ASSEMBLY

1. THE HORIZONTAL CENTER LINE THROUGH THE DOWEL PIN HOLE AND SLOT IN THE BOTTOM MASS SHOULD ALIGH WITH THE SCRIBE MARKS ON THE STRUCTURE.

2. VERTICAL DISTANCE FROM SURFACE OF STRUCTURE TO BOTTOM MASS.

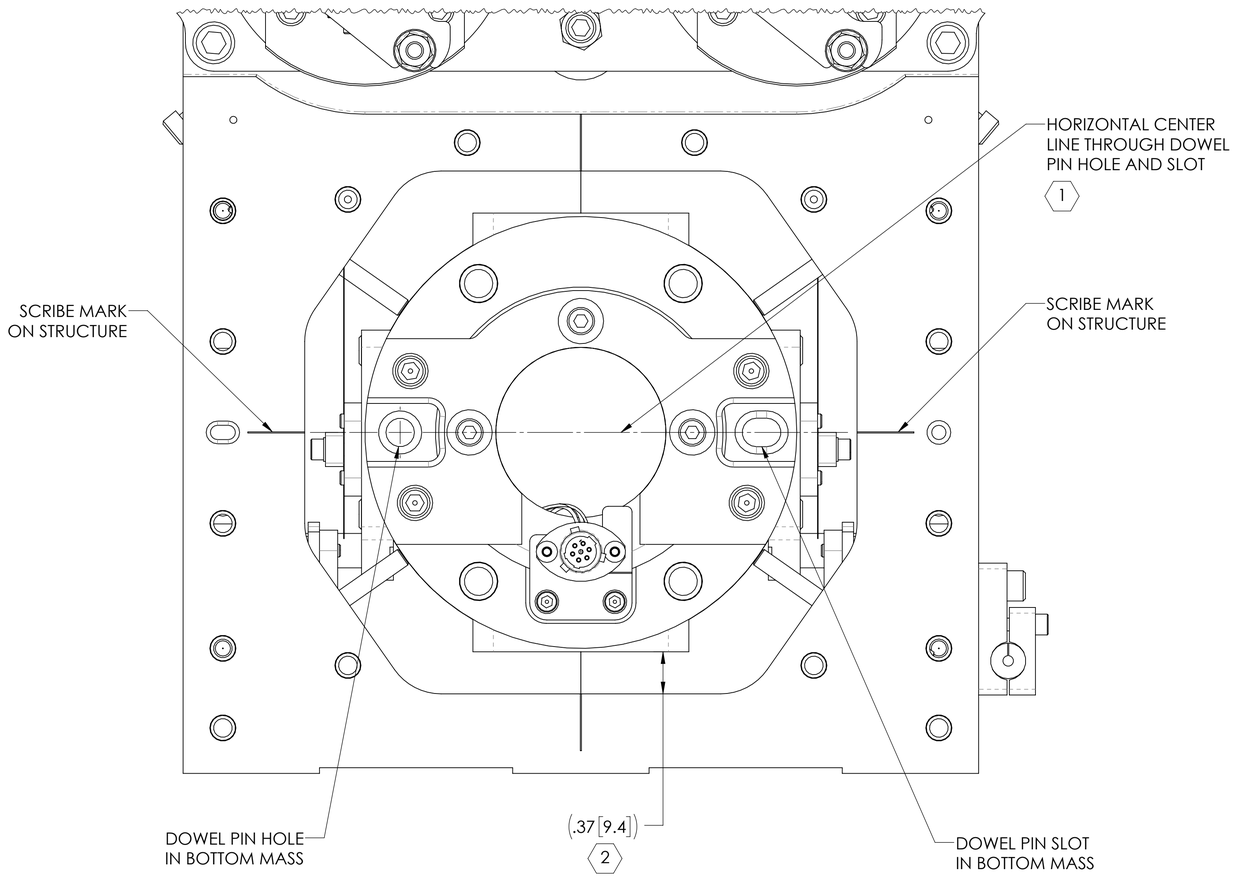

LIGO	CALIFORNIA INSTITUTE OF TECHNOLOGY MASSACHUSETTS INSTITUTE OF TECHNOLOGY	
SIZE D	DWG. NO. D2000474	REV. v5
SCALE: 3:2	PROJECTION:	SHEET 7 OF 7

PART PDM VERSION: v-042
DWG PDM VERSION: v-010
D2000474-A+, SUS, HTDS Assy (Thermal SAAS)