NOTES CONTINUED:

5. SCRIBE, ENGRAVE (A VIBRATORY TOOL MAY BE USED), LASER MARK OR MECHANICALLY STAMP (NO INKS OR DYES) DRAWING PART NUMBER, REVISION (AND VARIANT OR "TYPE" IF APPLICABLE) ON NOTED SURFACE OF PART FOLLOWED ON THE NEXT LINE WITH A THREE DIGIT SERIAL NUMBER. SERIAL NUMBERS START AT 001 FOR THE FIRST ARTICLE AND PROCEED CONSECUTIVELY. USE MINIMUM 0.12" HIGH CHARACTERS, UNLESS THE SIZE OF THE PART DICTATES SMALLER CHARACTERS. EXAMPLE: DXXXXXXX-VY, TYPE-XX, S/N XXX

6. APPROXIMATE WEIGHT = 0.796 LB.

7. MACHINE ALL SURFACES TO REMOVE OXIDES AND MILL FINISH, USE OF ABRASIVE REMOVAL TECHNIQUES IS NOT ALLOWED. REFER TO LIGO SPECIFICATION E0900364

8. ALL PARTS SHALL BE MANUFACTURED IN ACCORDANCE WITH LIGO SPECIFICATION E0900364

9. ALL HELI-COIL HOLES TO BE PREPARED ACCORDING TO EMHART HELI-COIL PRODUCT CATALOG, HC2000, REV 4

10. ALL HELI-COIL INSERTS TO BE INSTALLED BY LIGO PERSONNEL, AFTER DELIVERY OF FINISHED PARTS, USE NITRONIC 60 THREADED INSERTS.

11. ALL MATERIAL IS TO BE VIRGIN MATERIAL (i.e. NO WELD REPAIRS, PLUGS OR RECYCLED MATERIAL). NO REPAIRS SHALL BE MADE UNLESS APPROVED IN ADVANCE, AND IN WRITING, BY LIGO LABORATORY. REFER TO LIGO SPECIFICATION E0900364

REV.	DATE	DCN #	DRAWING TREE #
v1	13 JUL 2021	E2100285	-
-	-	-	-
-	-	-	-

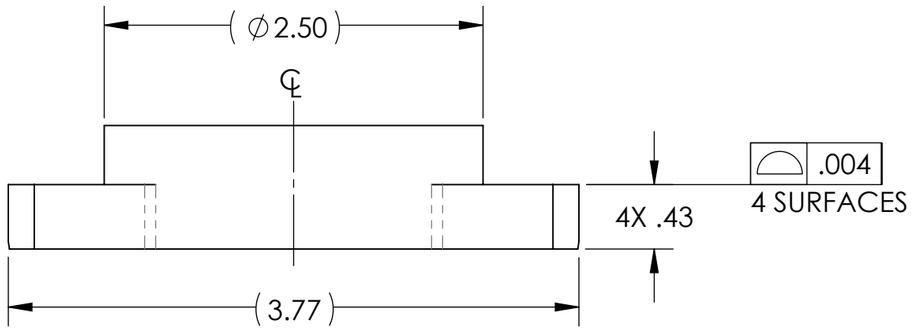

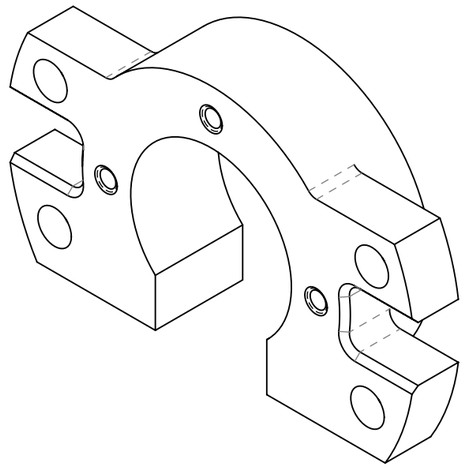

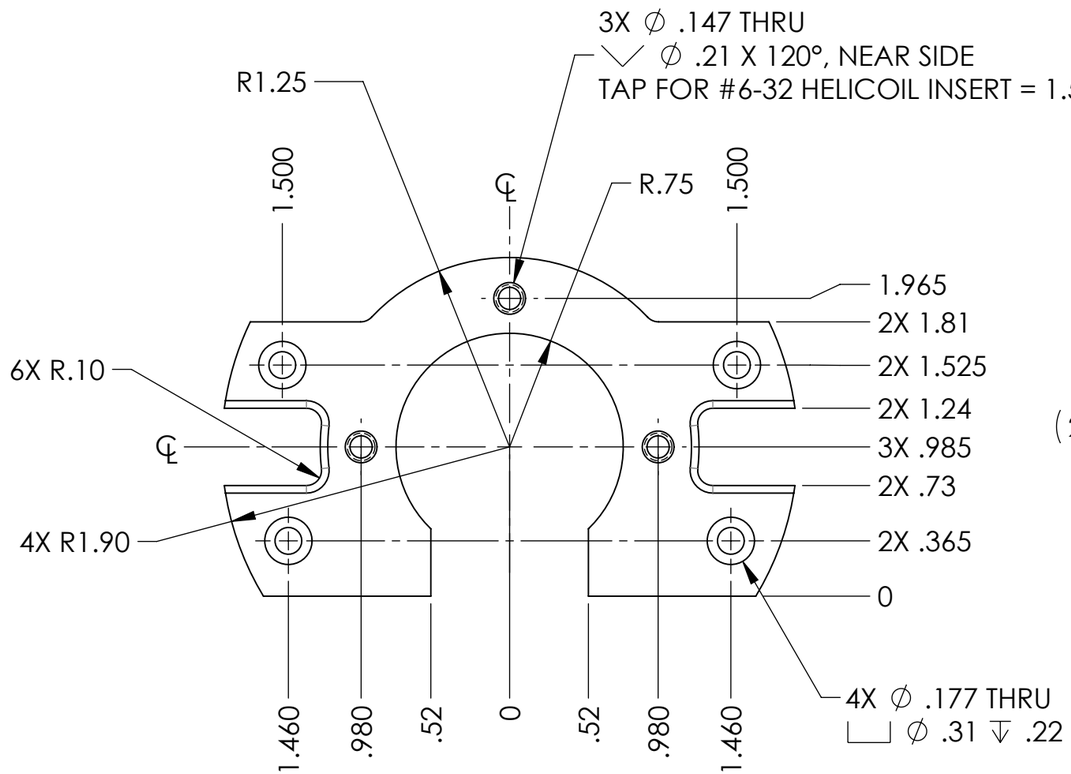

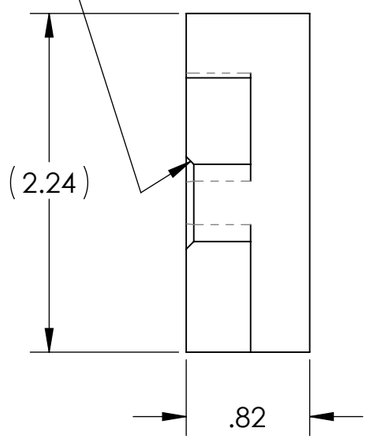

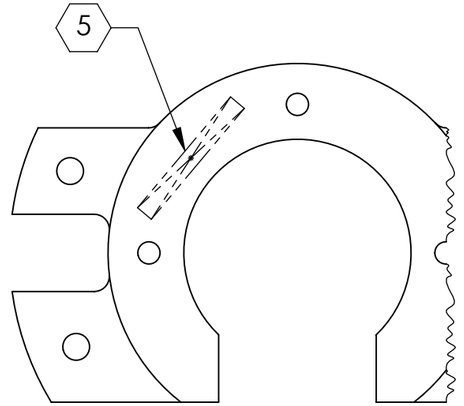

NOTES AND TOLERANCES: (UNLESS OTHERWISE SPECIFIED)									
DIMENSIONS ARE IN INCHES TOLERANCES: .XX ± .01 .XXX ± .005 ANGULAR ± 0.5°	1. INTERPRET DRAWING PER ASME Y14.5-1994. 2. REMOVE ALL SHARP EDGES, .005-.015. FOR MACHINED PARTS. 3. DO NOT SCALE FROM DRAWING. 4. ALL MACHINING FLUIDS MUST BE FULLY SYNTHETIC, FULLY WATER SOLUBLE AND FREE OF SULFUR, SILICONE, AND CHLORINE.		LIGO CALIFORNIA INSTITUTE OF TECHNOLOGY MASSACHUSETTS INSTITUTE OF TECHNOLOGY		PART NAME: A+, SUS, HDS Thermal SAMS Counterbalance Ring				
	MATERIAL: 304, 316 OR 302 SSTL	FINISH: 63 µinch	SYSTEM: A+	SUB-SYSTEM: SUS	DESIGNER: D. GRIFFITH	29 JUN 2021	SIZE: B	DWG. NO.: D2000472	REV.: v1
			NEXT ASSY: D2000275		DRAFTER: D. GRIFFITH	15 DEC 2020			
					CHECKER: SEE DCC	SEE DCC			
					APPROVAL:		SCALE: 1:1	PROJECTION:	SHEET 1 OF 1