NOTES CONTINUED:

⟨5⟩ SCRIBE, ENGRAVE (A VIBRATORY TOOL MAY BE USED), LASER MARK OR MECHANICALLY STAMP (NO INKS OR DYES) DRAWING PART NUMBER, REVISION (AND VARIANT OR "TYPE" IF APPLICABLE) ON NOTED SURFACE OF PART FOLLOWED ON THE NEXT LINE WITH A THREE DIGIT SERIAL NUMBER. SERIAL NUMBERS START AT 001 FOR THE FIRST ARTICLE AND PROCEED CONSECUTIVELY. USE MINIMUM 0.12" HIGH CHARACTERS, UNLESS THE SIZE OF THE PART DICTATES SMALLER CHARACTERS. EXAMPLE: DXXXXXXX-VY, TYPE-XX, S/N XXX

6. APPROXIMATE WEIGHT = X.XXX LB.
7. MACHINE ALL SURFACES TO REMOVE OXIDES AND MILL FINISH, USE OF ABRASIVE REMOVAL TECHNIQUES IS NOT ALLOWED. REFER TO LIGO E0900364
8. ALL PARTS SHALL BE MANUFACTURED IN ACCORDANCE WITH LIGO SPECIFICATION E0900364
9. ALL HELI-COIL HOLES TO BE PREPARED ACCORDING TO EMHART HELI-COIL PRODUCT CATALOG, HC2000, REV 4
10. ALL HELI-COIL INSERTS TO BE INSTALLED BY LIGO PERSONNEL, AFTER DELIVERY OF FINISHED PARTS, USE NITRONIC 60 THREADED INSERTS.
11. ALL MATERIAL IS TO BE VIRGIN MATERIAL (i.e. NO WELD REPAIRS, PLUGS OR RECYCLED MATERIAL). NO REPAIRS SHALL BE MADE UNLESS APPROVED IN ADVANCE, AND IN WRITING, BY LIGO LABORATORY. REFER TO LIGO E0900364

⟨12⟩ SURFACES INDICATED WILL BE PLASMA-SPRAY ALUMINIUM OXIDE COATED PER LIGO SPECIFICATION E2100125 AFTER FABRICATION. SURFACES NOT INDICATED SHOULD BE MASKED DURING COATING. SURFACES NOT INDICATED WILL HAVE NO COATING AT ALL.

13. DIMENSIONS APPLY BEFORE PLASMA COATING UNLESS SPECIFIED.

REV.	DATE	DCN #	DRAWING TREE #
v2	08 JUN 2021	E2100192-x0	
v3	10 JUN 2021	E2100192-x0	

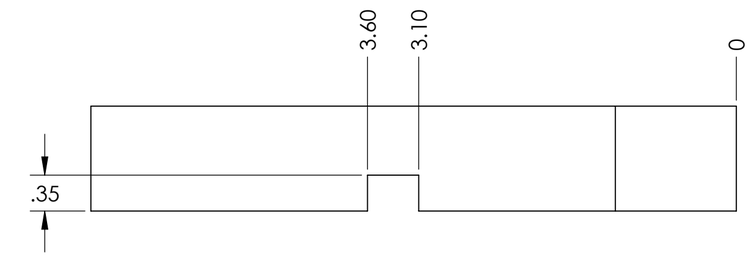

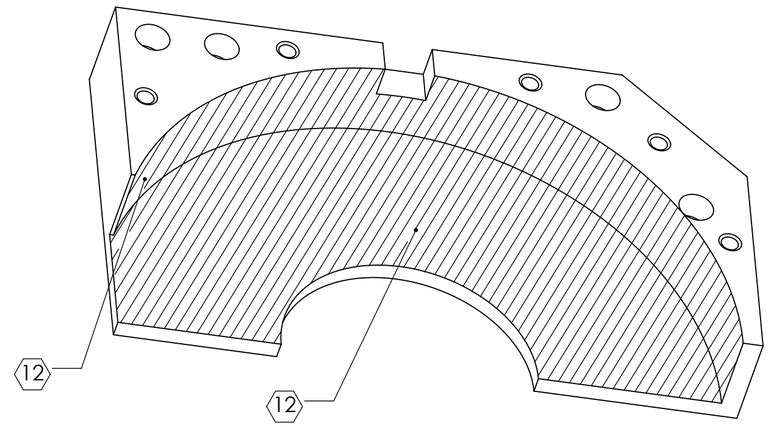

ANGLED VIEW FROM BOTTOM

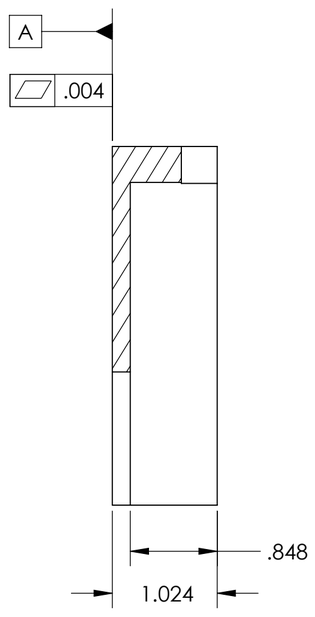

SECTION A-A

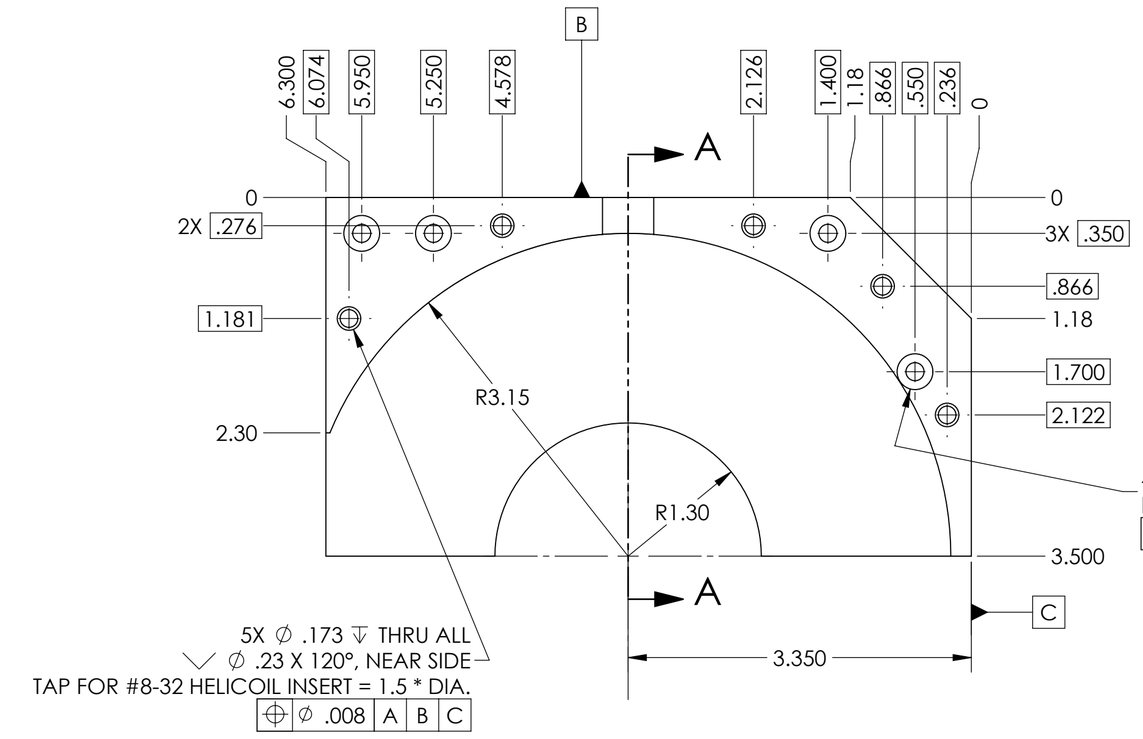

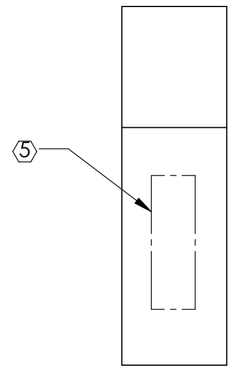

NOTES AND TOLERANCES: (UNLESS OTHERWISE SPECIFIED)

DIMENSIONS ARE IN INCHES

TOLERANCES:
.XX ± .01
.XXX ± .005

ANGULAR ± 0.5°

1. INTERPRET DRAWING PER ASME Y14.5-1994.
2. REMOVE ALL SHARP EDGES, .005-.015. FOR MACHINED PARTS.
3. DO NOT SCALE FROM DRAWING.
4. ALL MACHINING FLUIDS MUST BE FULLY SYNTHETIC, FULLY WATER SOLUBLE AND FREE OF SULFUR, SILICONE, AND CHLORINE.

MATERIAL: 6061-T6 Al

FINISH: 63 µinch ⟨12⟩

LIGO CALIFORNIA INSTITUTE OF TECHNOLOGY MASSACHUSETTS INSTITUTE OF TECHNOLOGY

SYSTEM: A+ | **SUB-SYSTEM**: SUS | **NEXT ASSY**: D2000474

PART NAME: A+, SUS, HDS Thermal SAMS Shield Left

DESIGNER	NG; CAO		
DRAFTER	S. KARAT	05 OCT 2020	
CHECKER	SEE DCC	SEE DCC	
APPROVAL	SEE DCC	SEE DCC	

SIZE: C | **DWG. NO.**: D2000276 | **REV.**: v3

SCALE: 7:8 | **PROJECTION**: | SHEET 1 OF 1