NOTES CONTINUED:

⟨5⟩ SCRIBE, ENGRAVE (A VIBRATORY TOOL MAY BE USED), LASER MARK OR MECHANICALLY STAMP (NO INKS OR DYES) DRAWING PART NUMBER, REVISION (AND VARIANT OR "TYPE" IF APPLICABLE) ON NOTED SURFACE OF PART FOLLOWED ON THE NEXT LINE WITH A THREE DIGIT SERIAL NUMBER. SERIAL NUMBERS START AT 001 FOR THE FIRST ARTICLE AND PROCEED CONSECUTIVELY. USE MINIMUM 0.12" HIGH CHARACTERS, UNLESS THE SIZE OF THE PART DICTATES SMALLER CHARACTERS. EXAMPLE: DXXXXXXX-VY, TYPE-XX, S/N XXX

6. APPROXIMATE WEIGHT = X.XXX LB.
7. MACHINE ALL SURFACES TO REMOVE OXIDES AND MILL FINISH, USE OF ABRASIVE REMOVAL TECHNIQUES IS NOT ALLOWED. REFER TO LIGO E0900364
8. ALL PARTS SHALL BE MANUFACTURED IN ACCORDANCE WITH LIGO SPECIFICATION E0900364
9. ALL HELI-COIL HOLES TO BE PREPARED ACCORDING TO EMHART HELI-COIL PRODUCT CATALOG, HC2000, REV 4
10. ALL HELI-COIL INSERTS TO BE INSTALLED BY LIGO PERSONNEL, AFTER DELIVERY OF FINISHED PARTS, USE NITRONIC 60 THREADED INSERTS.
11. ALL MATERIAL IS TO BE VIRGIN MATERIAL (i.e. NO WELD REPAIRS, PLUGS OR RECYCLED MATERIAL). NO REPAIRS SHALL BE MADE UNLESS APPROVED IN ADVANCE, AND IN WRITING, BY LIGO LABORATORY. REFER TO LIGO E0900364

NOTES CONTINUED ON NEXT SHEET

REV.	DATE	DCN #	DRAWING TREE #
v2	08 JUN 2021	E2100192-x0	

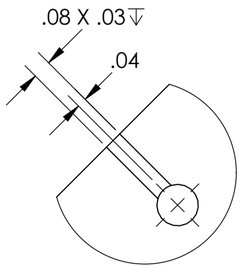

DETAIL C
SCALE 2 : 1
TYP 2 PLACES

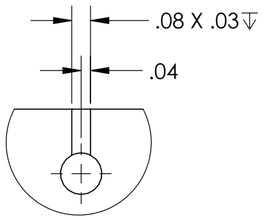

DETAIL D
SCALE 2 : 1
TYP 8 PLACES

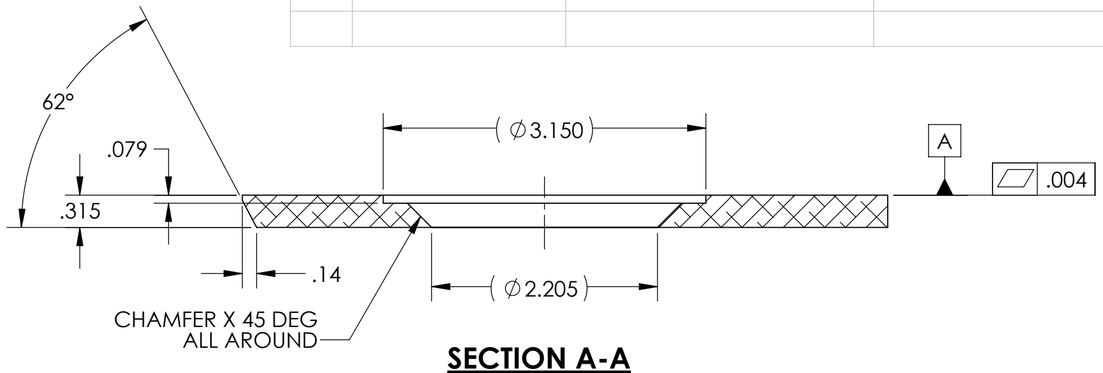

SECTION A-A

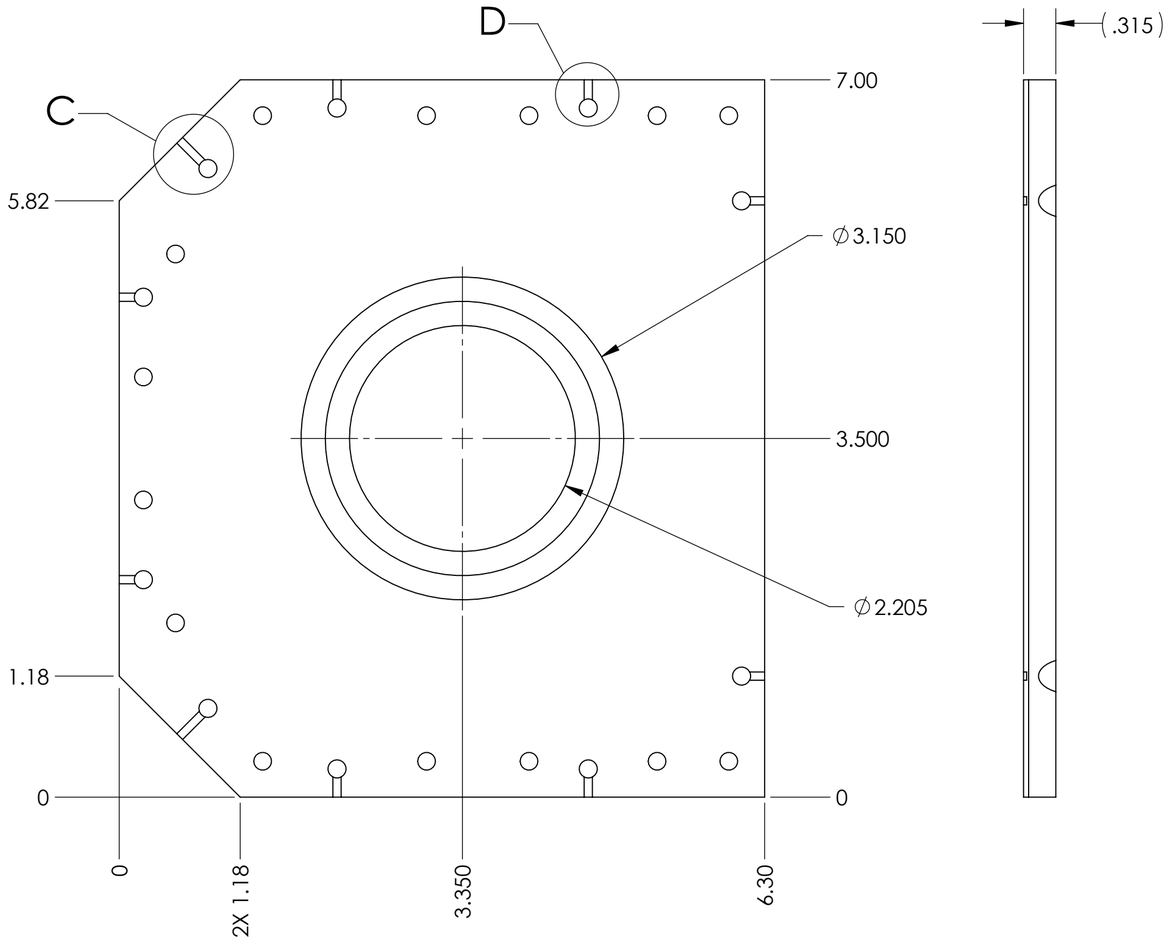

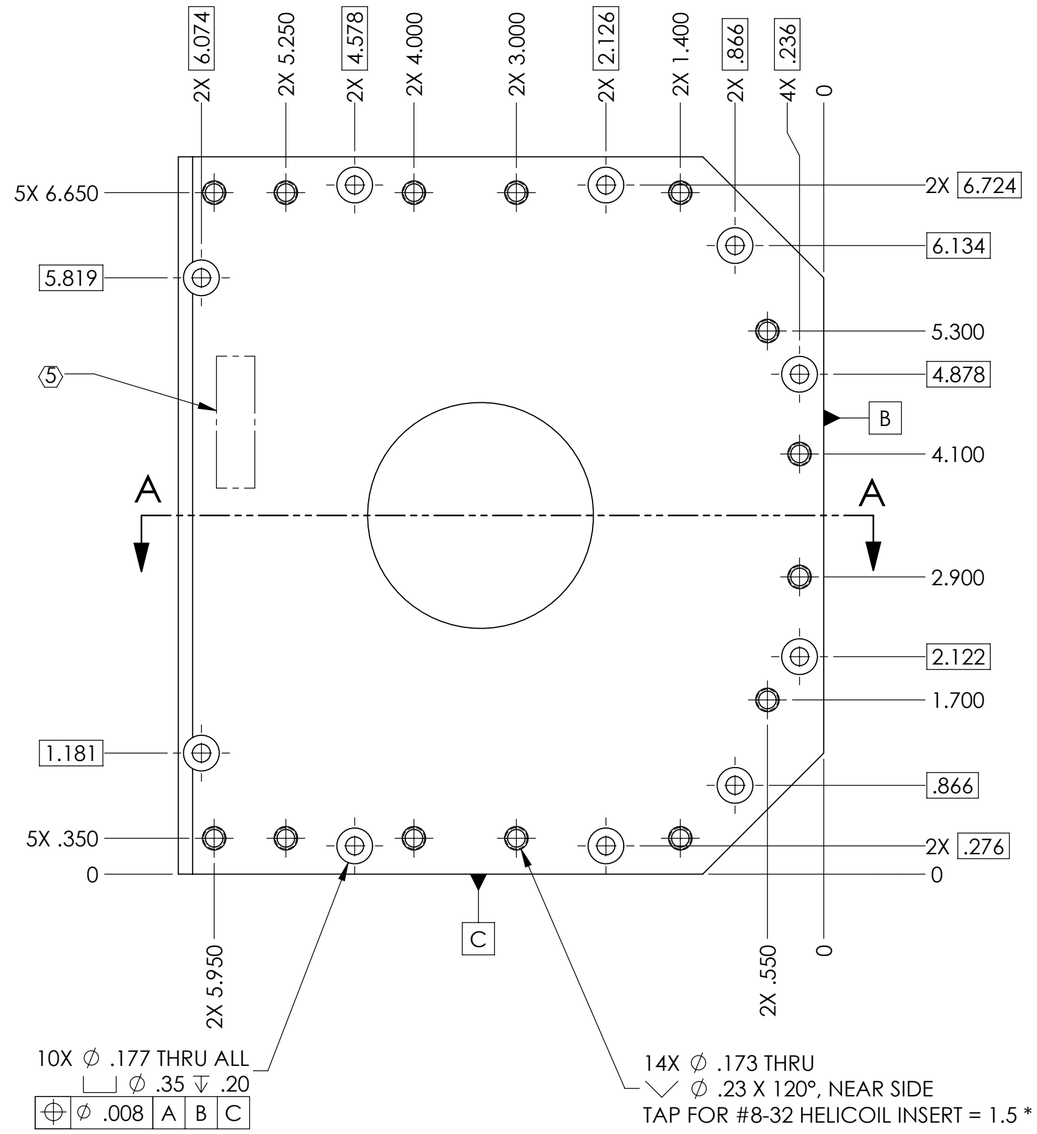

NOTES AND TOLERANCES: (UNLESS OTHERWISE SPECIFIED)

DIMENSIONS ARE IN INCHES

TOLERANCES:
.XX ± .01
.XXX ± .005

ANGULAR ± 0.5°

1. INTERPRET DRAWING PER ASME Y14.5-1994.
2. REMOVE ALL SHARP EDGES, .005-.015. FOR MACHINED PARTS.
3. DO NOT SCALE FROM DRAWING.
4. ALL MACHINING FLUIDS MUST BE FULLY SYNTHETIC, FULLY WATER SOLUBLE AND FREE OF SULFUR, SILICONE, AND CHLORINE.

MATERIAL: 6061-T6 Al

FINISH: 63 µinch ⟨12⟩

LIGO — CALIFORNIA INSTITUTE OF TECHNOLOGY, MASSACHUSETTS INSTITUTE OF TECHNOLOGY

SYSTEM: A+ | **SUB-SYSTEM**: SUS

NEXT ASSY: D2000474

PART NAME: A+, SUS, HDS Thermal SAMS Shield Front

DESIGNER	NG; CAO		
DRAFTER	S. KARAT	08 OCT 2020	
CHECKER	SEE DCC	SEE DCC	
APPROVAL	SEE DCC	SEE DCC	

SIZE: C | **DWG. NO.**: D2000272 | **REV.**: v2

SCALE: 7:8 | **PROJECTION**: | SHEET 1 OF 2

NOTES CONTINUED:

12. ALL SURFACES WITHIN AREA INDICATED WILL BE PLASMA-SPRAY ALUMINIUM OXIDE COATED PER LIGO SPECIFICATION E2100125 AFTER FABRICATION. ALL OTHER SURFACES TO BE FREE FROM COATING.

13. DIMENSIONS APPLY BEFORE PLASMA COATING UNLESS SPECIFIED.

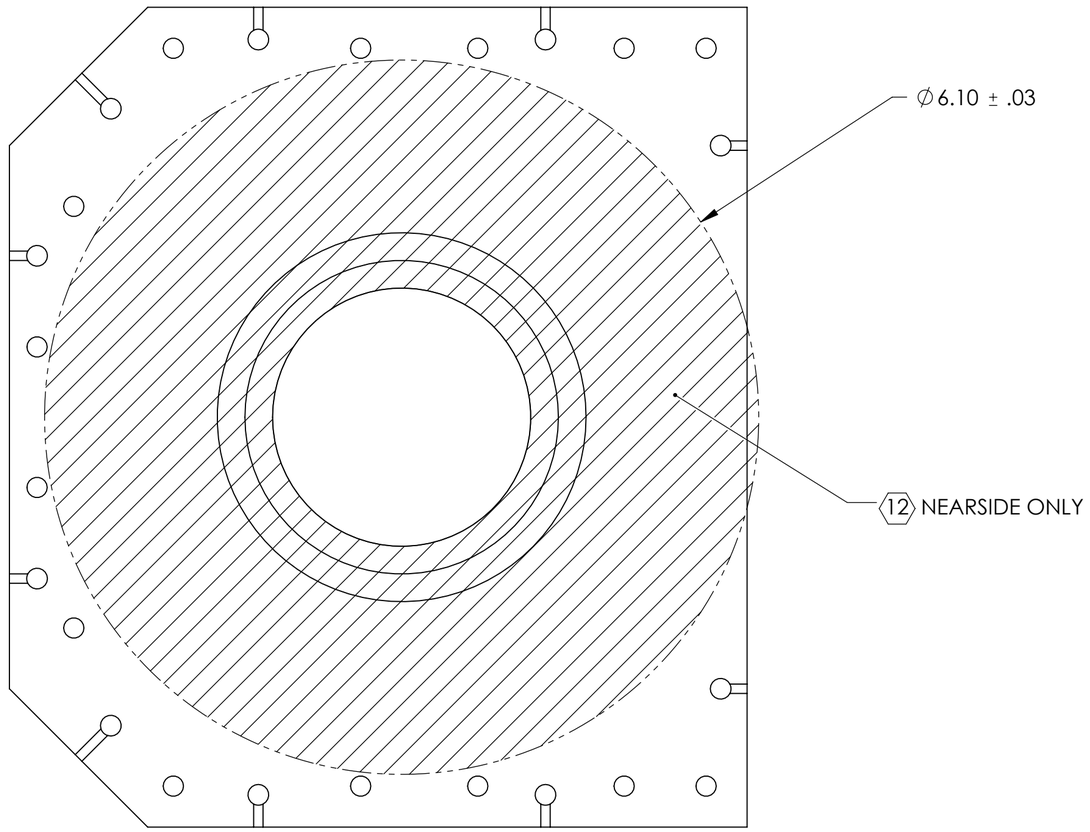

LIGO CALIFORNIA INSTITUTE OF TECHNOLOGY MASSACHUSETTS INSTITUTE OF TECHNOLOGY		
SIZE C	DWG. NO. D2000272	REV. v2
SCALE: 1:1	PROJECTION:	SHEET 2 OF 2

PART PDM VERSION: y-014
DWG PDM VERSION: y-027
D2000272 A+, SUS, HDS Thermal SAMS Shield Front