NOTES CONTINUED:

⑤ SCRIBE, ENGRAVE (A VIBRATORY TOOL MAY BE USED), LASER MARK OR MECHANICALLY STAMP (NO INKS OR DYES) DRAWING PART NUMBER, REVISION (AND VARIANT OR "TYPE" IF APPLICABLE) ON NOTED SURFACE OF PART FOLLOWED ON THE NEXT LINE WITH A THREE DIGIT SERIAL NUMBER. SERIAL NUMBERS START AT 001 FOR THE FIRST ARTICLE AND PROCEED CONSECUTIVELY. USE MINIMUM 0.12" HIGH CHARACTERS, UNLESS THE SIZE OF THE PART DICTATES SMALLER CHARACTERS. EXAMPLE: DXXXXXXX-VY, TYPE-XX, S/N XXX

6. APPROXIMATE WEIGHT = 1.751 LB.
7. MACHINE ALL SURFACES TO REMOVE OXIDES AND MILL FINISH, USE OF ABRASIVE REMOVAL TECHNIQUES IS NOT ALLOWED. REFER TO LIGO E0900364
8. ALL PARTS SHALL BE MANUFACTURED IN ACCORDANCE WITH LIGO SPECIFICATION E0900364
9. ALL HELI-COIL HOLES TO BE PREPARED ACCORDING TO EMHART HELI-COIL PRODUCT CATALOG, HC2000, REV 4
10. ALL HELI-COIL INSERTS TO BE INSTALLED BY LIGO PERSONNEL, AFTER DELIVERY OF FINISHED PARTS, USE NITRONIC 60 THREADED INSERTS.
11. ALL MATERIAL IS TO BE VIRGIN MATERIAL (i.e. NO WELD REPAIRS, PLUGS OR RECYCLED MATERIAL). NO REPAIRS SHALL BE MADE UNLESS APPROVED IN ADVANCE, AND IN WRITING, BY LIGO LABORATORY. REFER TO LIGO E0900364
12. UNLESS OTHERWISE SPECIFIED, MACHINE FILLET RADII .010 MAX.

REV.	DATE	DCN #	DRAWING TREE #
v1	30 JUN 2020	-	-
v2	08 JUL 2021	E2100285	-
-	-	-	-

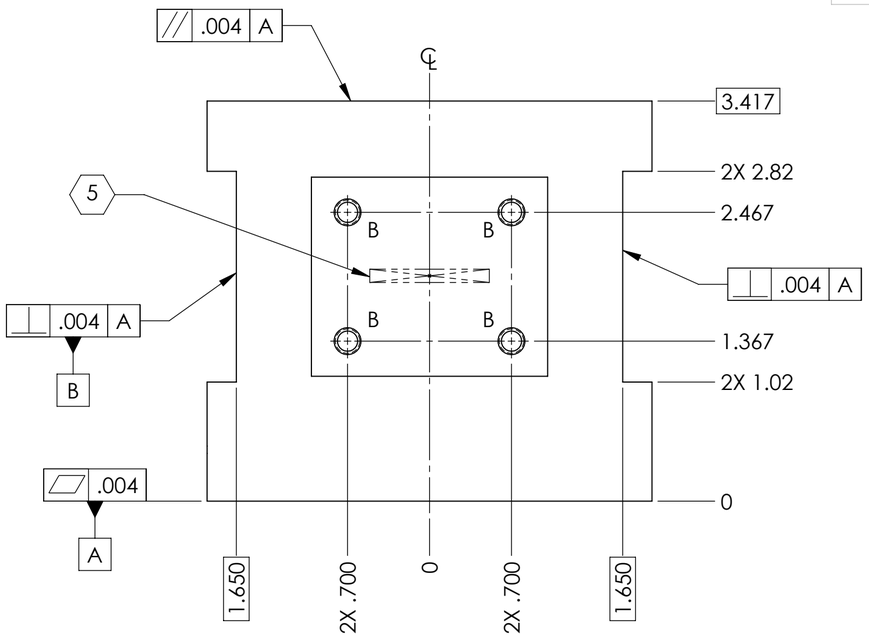

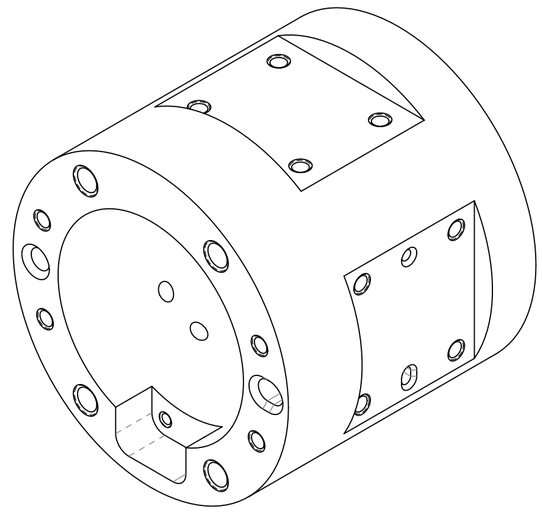

3D VIEW

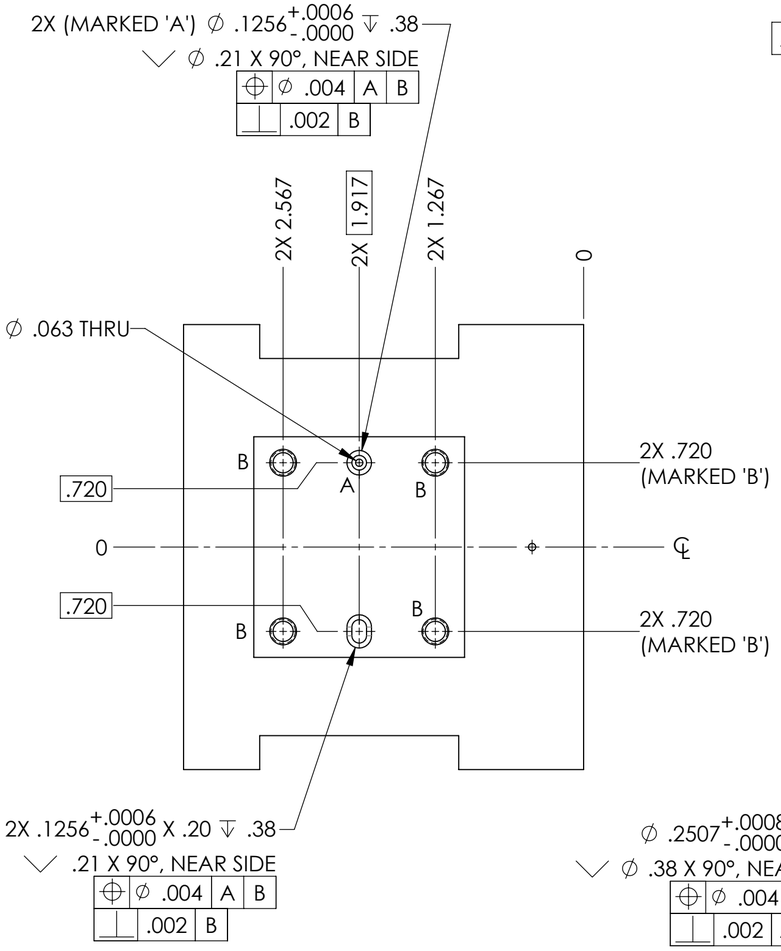

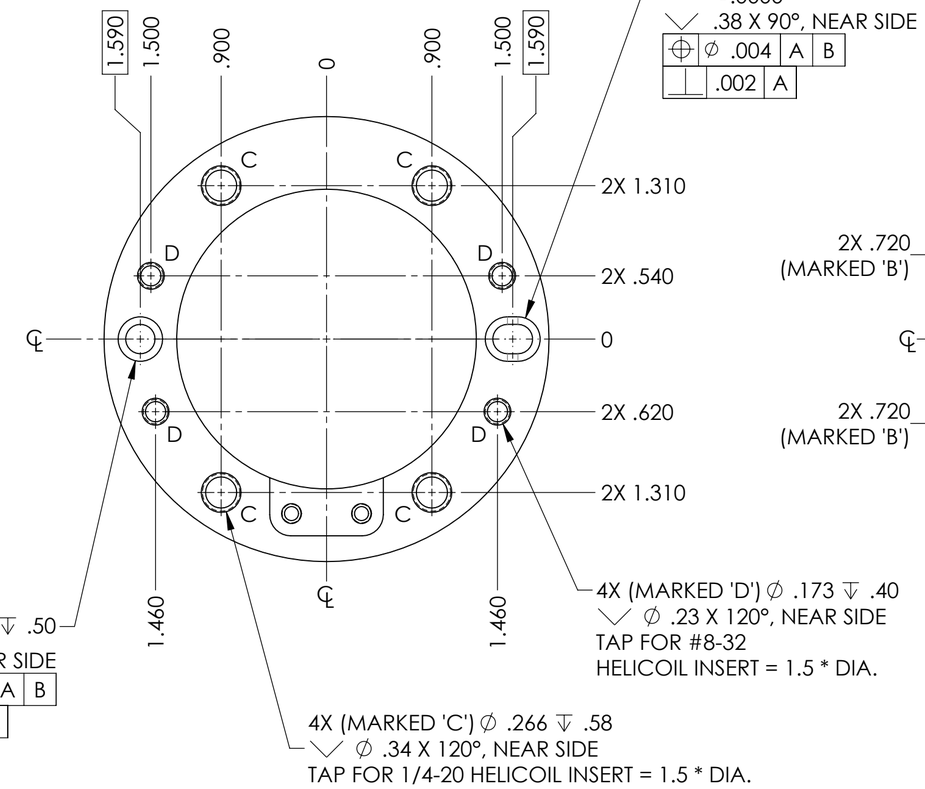

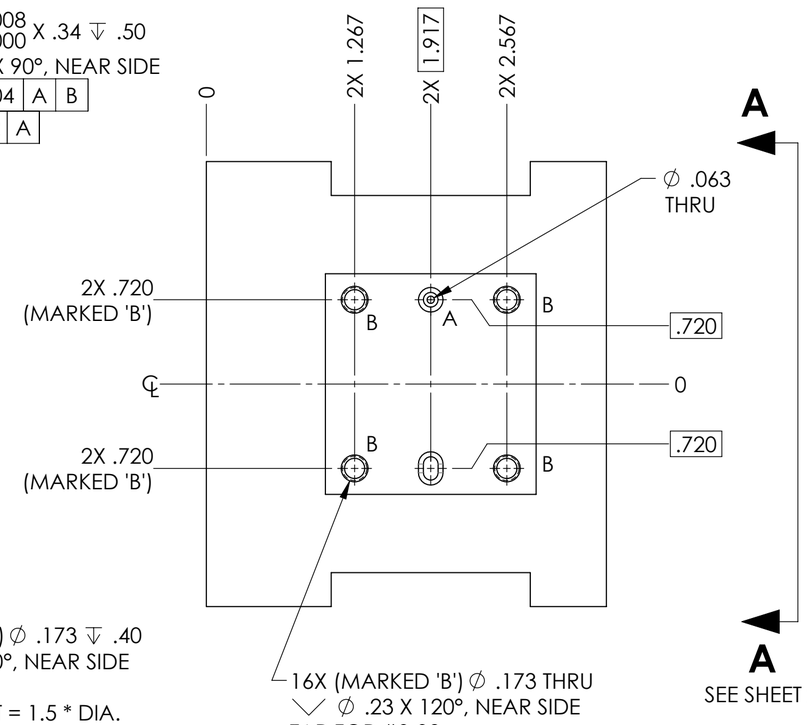

NOTES AND TOLERANCES: (UNLESS OTHERWISE SPECIFIED)

DIMENSIONS ARE IN INCHES

TOLERANCES:
.XX ± .01
.XXX ± .005

ANGULAR ± 0.5°

1. INTERPRET DRAWING PER ASME Y14.5-1994.
2. REMOVE ALL SHARP EDGES, .005-.015. FOR MACHINED PARTS.
3. DO NOT SCALE FROM DRAWING.
4. ALL MACHINING FLUIDS MUST BE FULLY SYNTHETIC, FULLY WATER SOLUBLE AND FREE OF SULFUR, SILICONE, AND CHLORINE.

MATERIAL 6061-T651 Al

FINISH 63 µinch

LIGO CALIFORNIA INSTITUTE OF TECHNOLOGY MASSACHUSETTS INSTITUTE OF TECHNOLOGY

SYSTEM A+

SUB-SYSTEM SUS

NEXT ASSY D2000275

PART NAME A+, SUS, HDS Thermal SAMS Housing

DESIGNER	D. GRIFFITH	25 JUN 2021	
DRAFTER	D. GRIFFITH	10 JUN 2020	
CHECKER	SEE DCC	SEE DCC	
APPROVAL			

SIZE c **DWG. NO.** D2000271 **REV.** v2

SCALE: 1:1 **PROJECTION:** SHEET 1 OF 2

PART PDM VERSION: y-017
DWG PDM VERSION: y-010
D2000271 A+, SUS, HDS Thermal SAMS Housing

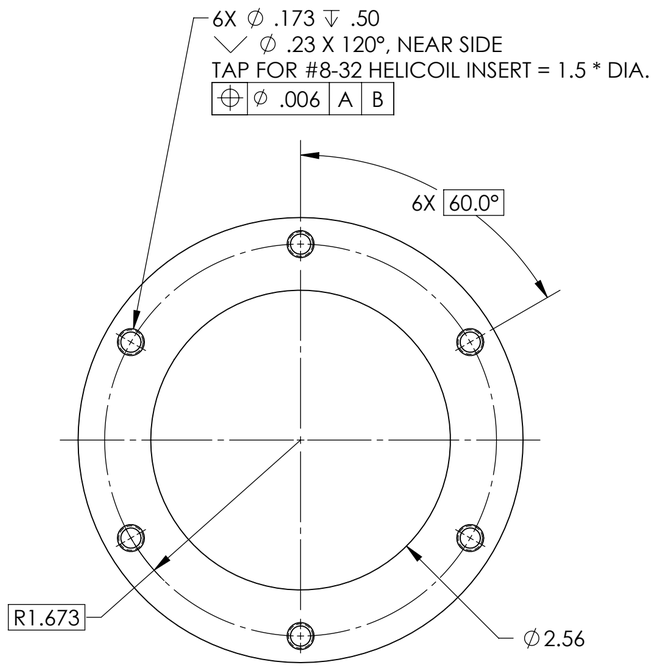

VIEW A-A

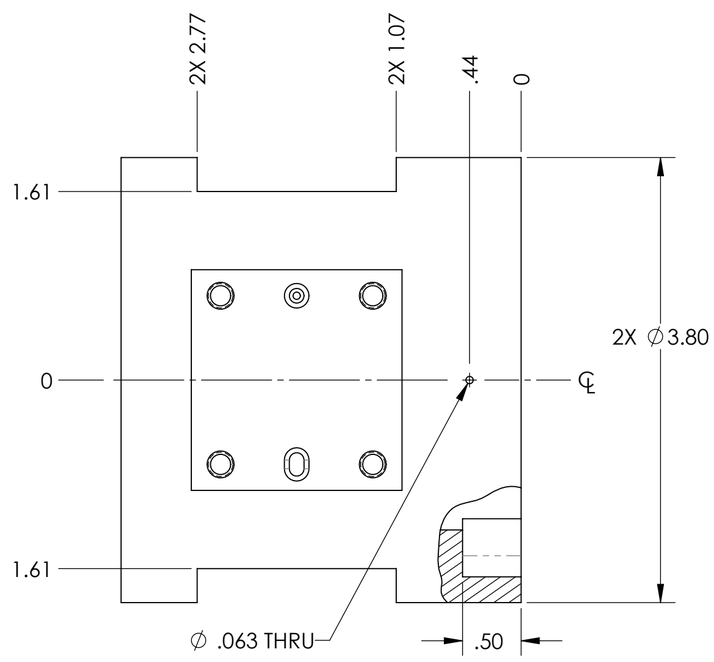

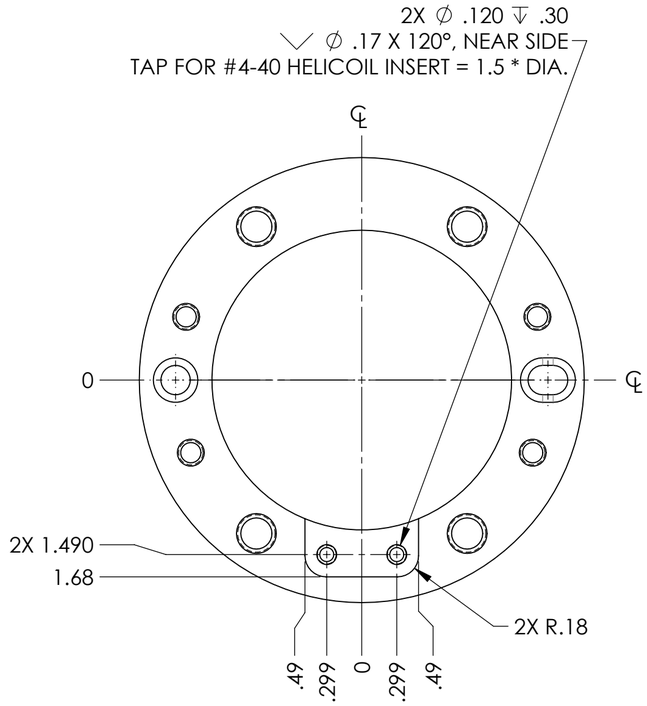

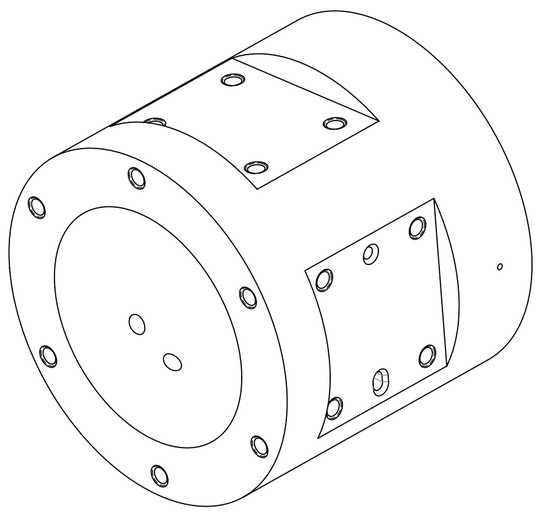

3D VIEW

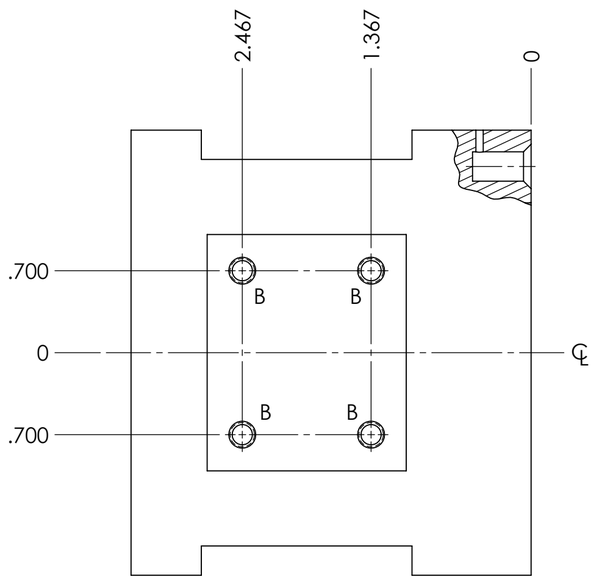

LIGO CALIFORNIA INSTITUTE OF TECHNOLOGY
MASSACHUSETTS INSTITUTE OF TECHNOLOGY

SIZE	DWG. NO.	REV.
C	D2000271	v2
SCALE: 1:1	PROJECTION:	SHEET 2 OF 2

PART PDM VERSION: y-017
DWG PDM VERSION: y-010
D2000271 A+, SUS, HDS Thermal SAMS Housing