REV.	DATE	DCN #	DRAWING TREE #
v3	2 AUG 2021	E2100338	-
-	-	-	-
-	-	-	-

NOTES CONTINUED:

5. SCRIBE, ENGRAVE (A VIBRATORY TOOL MAY BE USED), LASER MARK OR MECHANICALLY STAMP (NO INKS OR DYES) DRAWING PART NUMBER, REVISION (AND VARIANT OR "TYPE" IF APPLICABLE) ON NOTED SURFACE OF PART FOLLOWED ON THE NEXT LINE WITH A THREE DIGIT SERIAL NUMBER. SERIAL NUMBERS START AT 001 FOR THE FIRST ARTICLE AND PROCEED CONSECUTIVELY. USE MINIMUM 0.12" HIGH CHARACTERS, UNLESS THE SIZE OF THE PART DICTATES SMALLER CHARACTERS. EXAMPLE: DXXXXXXX-VY, TYPE-XX, S/N XXX

6. APPROXIMATE WEIGHT = 0.392 LB.

7. MACHINE ALL SURFACES TO REMOVE OXIDES AND MILL FINISH, USE OF ABRASIVE REMOVAL TECHNIQUES IS NOT ALLOWED. REFER TO LIGO SPECIFICATION E0900364

8. ALL PARTS SHALL BE MANUFACTURED IN ACCORDANCE WITH LIGO SPECIFICATION E0900364

9. ALL HELI-COIL HOLES TO BE PREPARED ACCORDING TO EMHART HELI-COIL PRODUCT CATALOG, HC2000, REV 4

10. ALL HELI-COIL INSERTS TO BE INSTALLED BY LIGO PERSONNEL, AFTER DELIVERY OF FINISHED PARTS, USE NITRONIC 60 THREADED INSERTS.

11. ALL MATERIAL IS TO BE VIRGIN MATERIAL (i.e. NO WELD REPAIRS, PLUGS OR RECYCLED MATERIAL). NO REPAIRS SHALL BE MADE UNLESS APPROVED IN ADVANCE, AND IN WRITING, BY LIGO LABORATORY. REFER TO LIGO SPECIFICATION E0900364

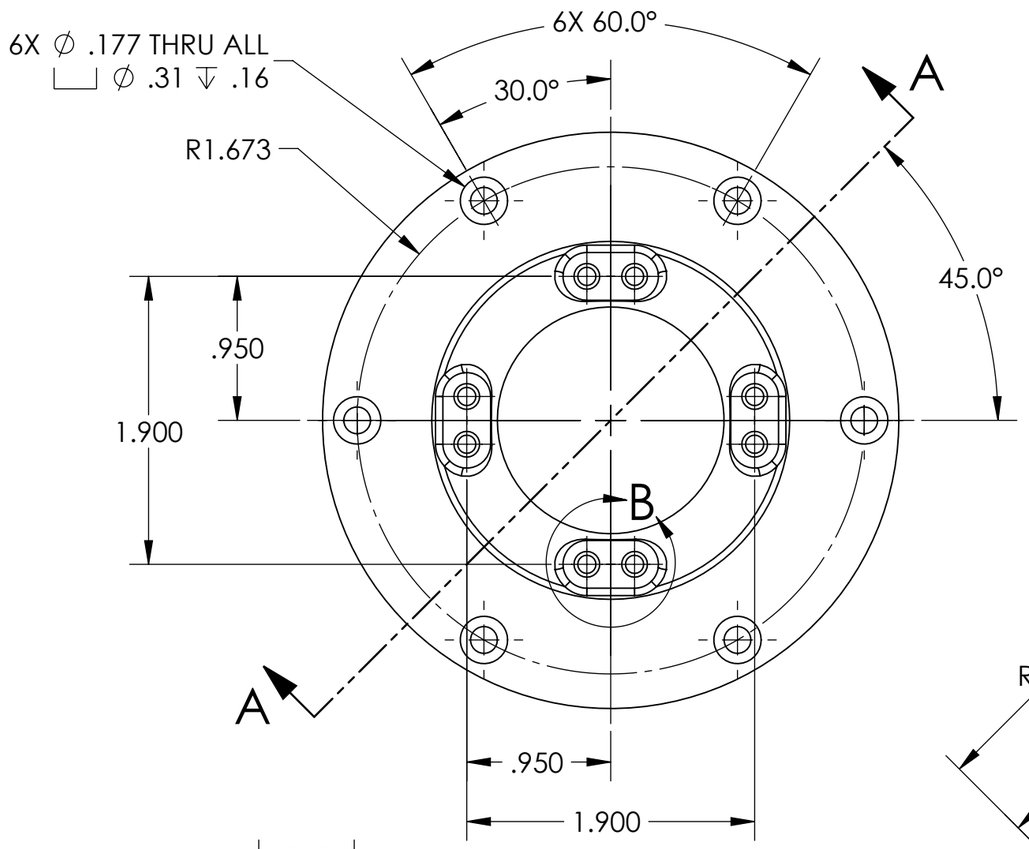

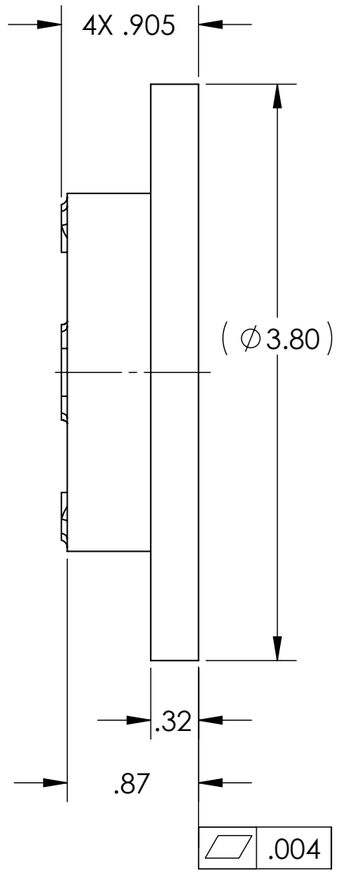

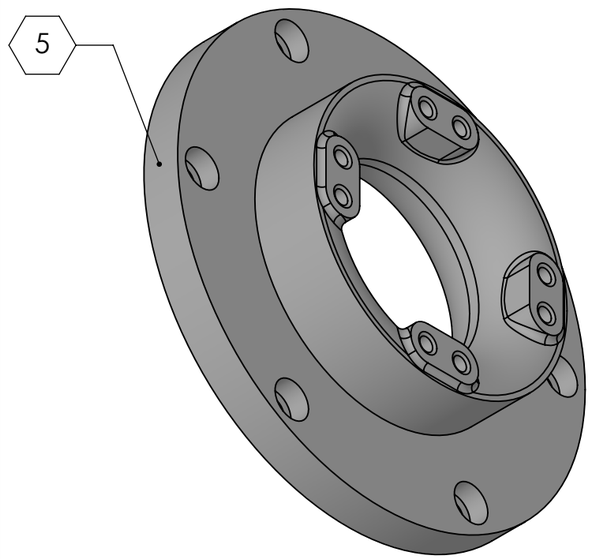

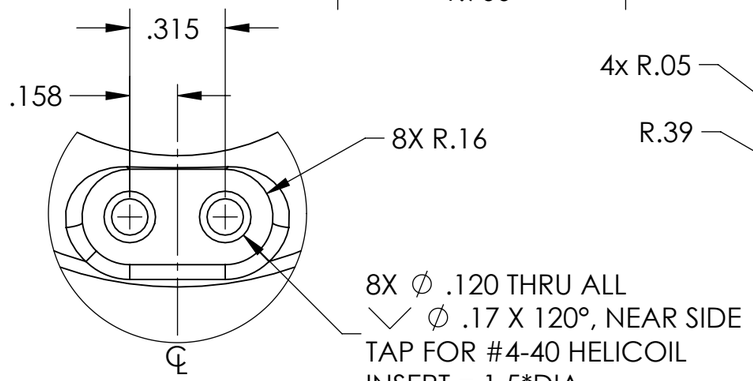

DETAIL B
SCALE 2 : 1
TYPICAL 4 PLACES

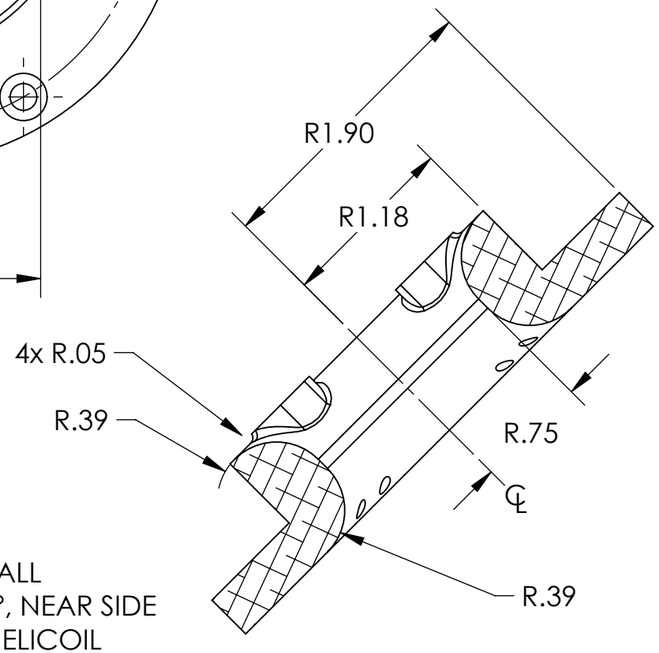

SECTION A-A

NOTES AND TOLERANCES: (UNLESS OTHERWISE SPECIFIED)							
DIMENSIONS ARE IN INCHES TOLERANCES: .XX ± .01 .XXX ± .005 ANGULAR ± 0.5°	1. INTERPRET DRAWING PER ASME Y14.5-1994. 2. REMOVE ALL SHARP EDGES, .005-.015. FOR MACHINED PARTS. 3. DO NOT SCALE FROM DRAWING. 4. ALL MACHINING FLUIDS MUST BE FULLY SYNTHETIC, FULLY WATER SOLUBLE AND FREE OF SULFUR, SILICONE, AND CHLORINE.		LIGO CALIFORNIA INSTITUTE OF TECHNOLOGY MASSACHUSETTS INSTITUTE OF TECHNOLOGY		PART NAME: A+, SUS, HDS Thermal SAMS Actuator Manifold		
	MATERIAL: 6061-T6	FINISH: 63 µinch	SYSTEM: A+	SUB-SYSTEM: SUS	DESIGNER: S. NG 11 DEC 2020 DRAFTER: S. NG 15/12/2020 CHECKER APPROVAL	SIZE: B	DWG. NO.: D2000270 REV: v3 NEXT ASSY: D2000275 SCALE: 1:1 PROJECTION: SHEET 1 OF 1