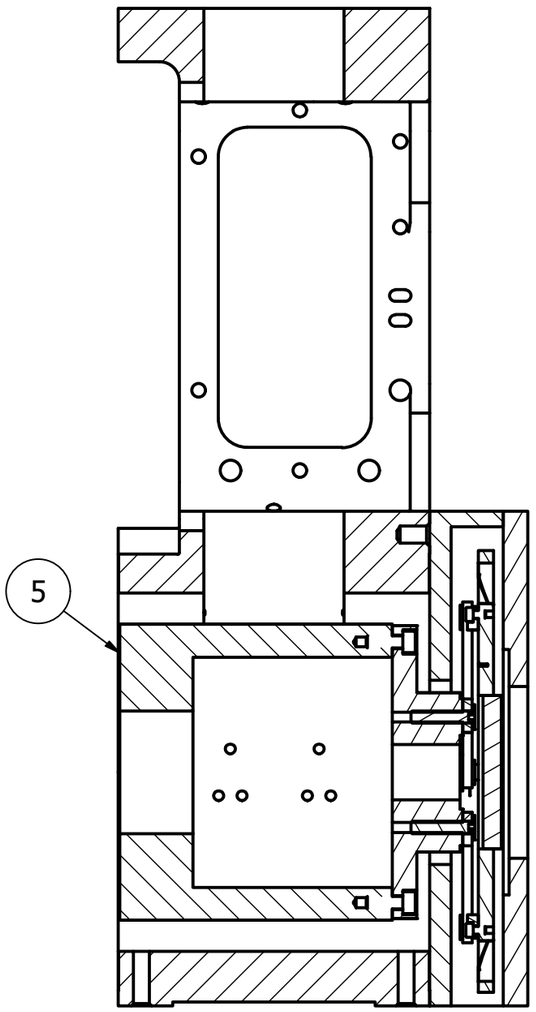

A-A (1 : 2)

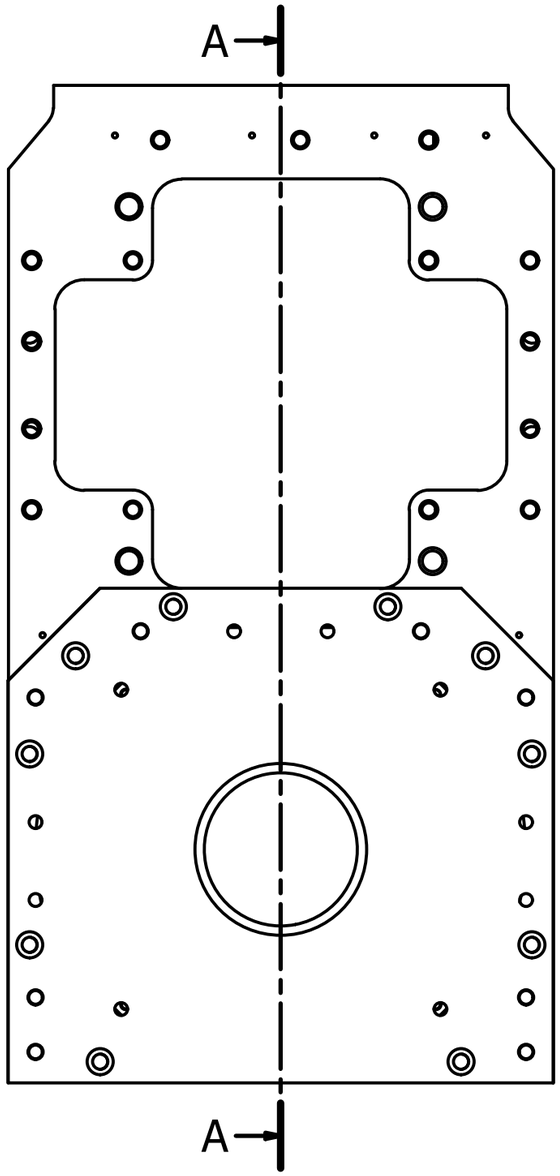

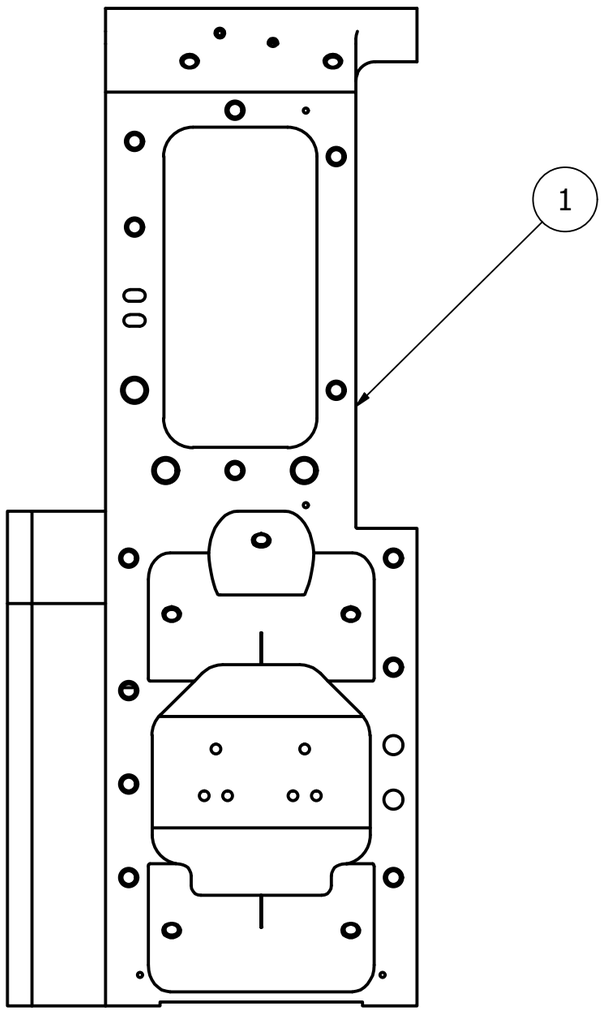

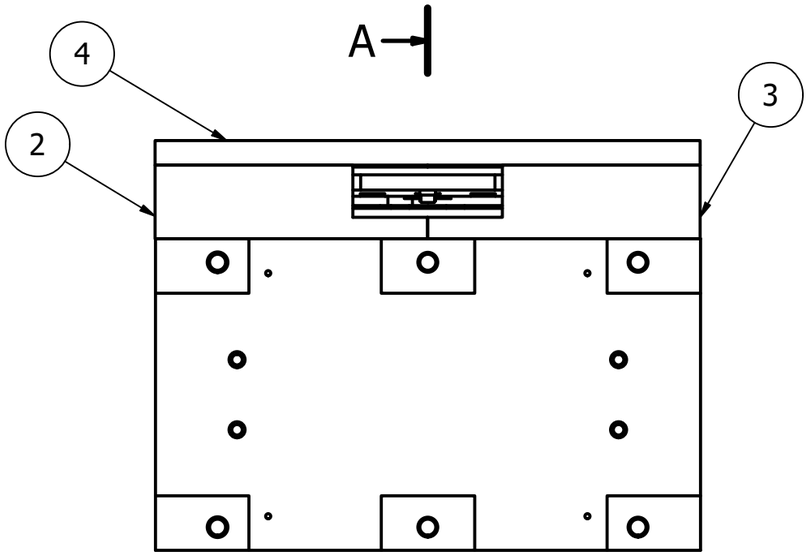

PARTS LIST			
ITEM	QTY	PART NUMBER	DESCRIPTION
1	1	D1900353	HAM Double Suspension - Monolithic Structure
2	1	D2000276	Thermal Shield Left
3	1	D2000277	Thermal Shield Right
4	1	D2000272	Thermal Shield Front
5	1	D2000275	Thermal Actuator Sub-Assembly

Designed by	Checked by	Approved by	Date		Date	
sebng				1 : 2	5/06/2020	A3

All dimensions in mm
unless otherwise stated.

	Edition	Sheet
D2000267	0.9	1 / 1