CFM updates
Thermal modelling

SAMS meeting (2020/04/10)

LIGO-E2000205

Huy Tuong Cao, Sebastian Ng

1. Conduction vs Radiation thermal resistance :

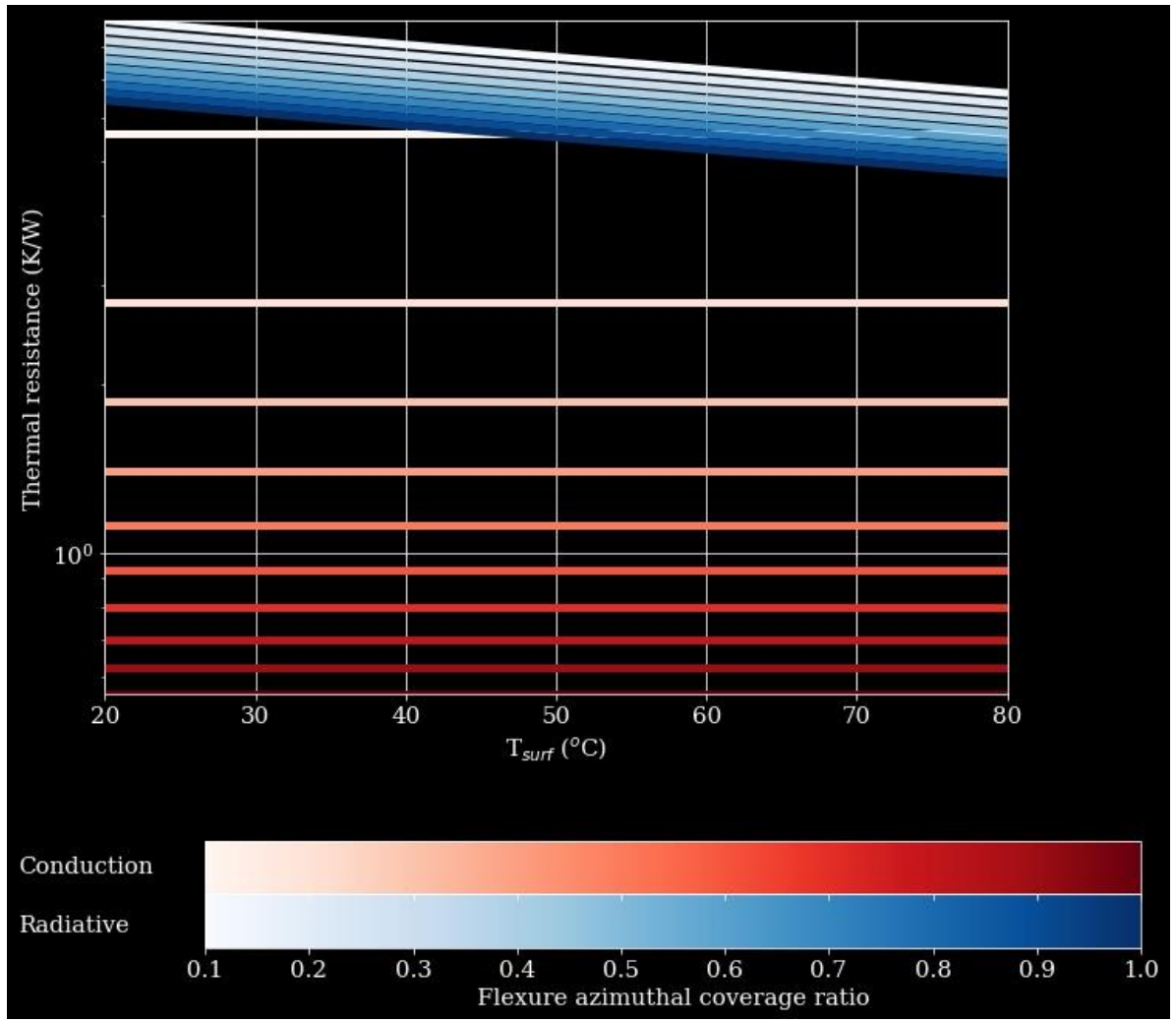

- **Goal**: lower radiation thermal resistance → radiative heat transfer dominates, less conduction to the rest of supporting structure.
- **Flexure azimuthal coverage ratio**: the portion of the actuating ring circumference connected to the flexure.
- Can't make flexure longer (diameter-limited)

→ Remove more materials

- 1 singular circular flexure: $R_{rad} \approx 10R_{cond}$
- Reduce to 0.1 ratio: $R_{rad} \approx R_{cond}$

2. How many flexures

- Lower flexure area → less stiff , lower frequency eigenmode.
- For the same amount of coverage, more flexures make structure stiffer
- But for Nflex ≥ 5, doesn't make much difference
- Select a middle point design, i.e. relatively stiff, lower surface area. Choose **7 flexures, 15% coverage**

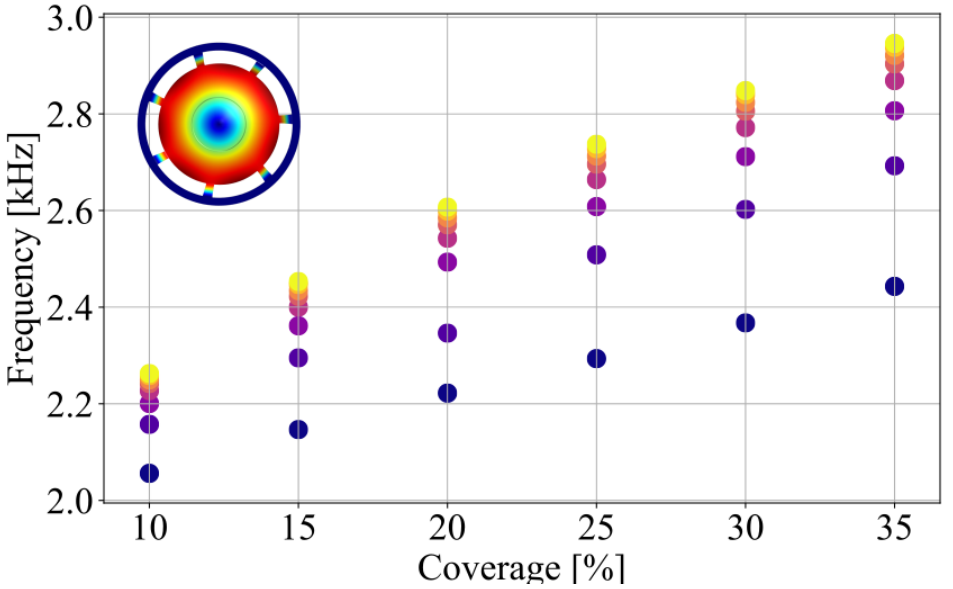

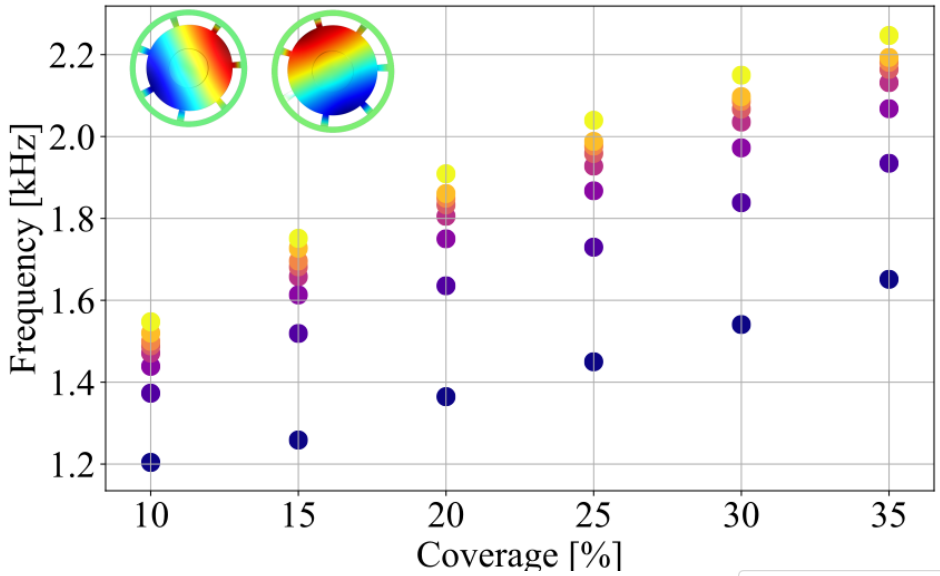

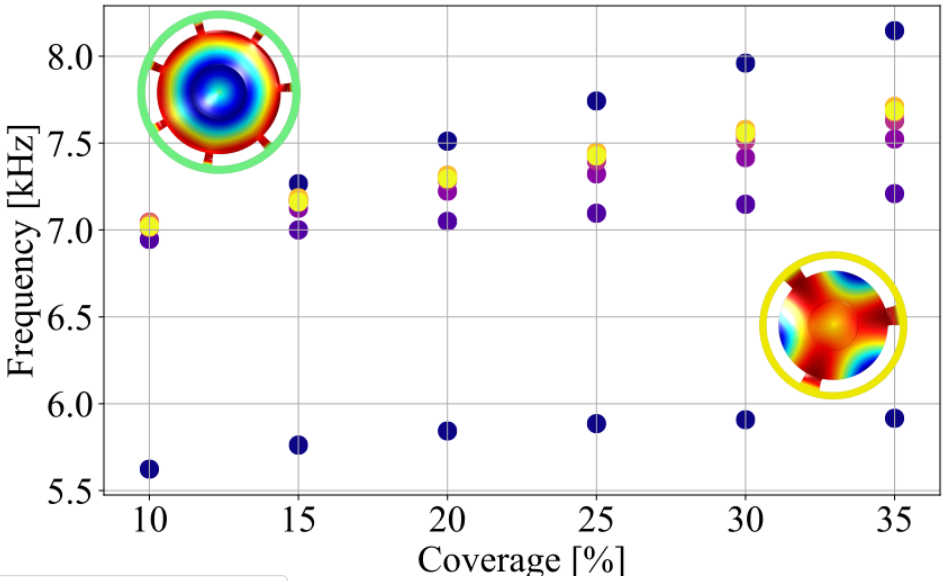

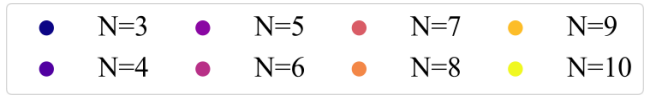

3. Tentative design

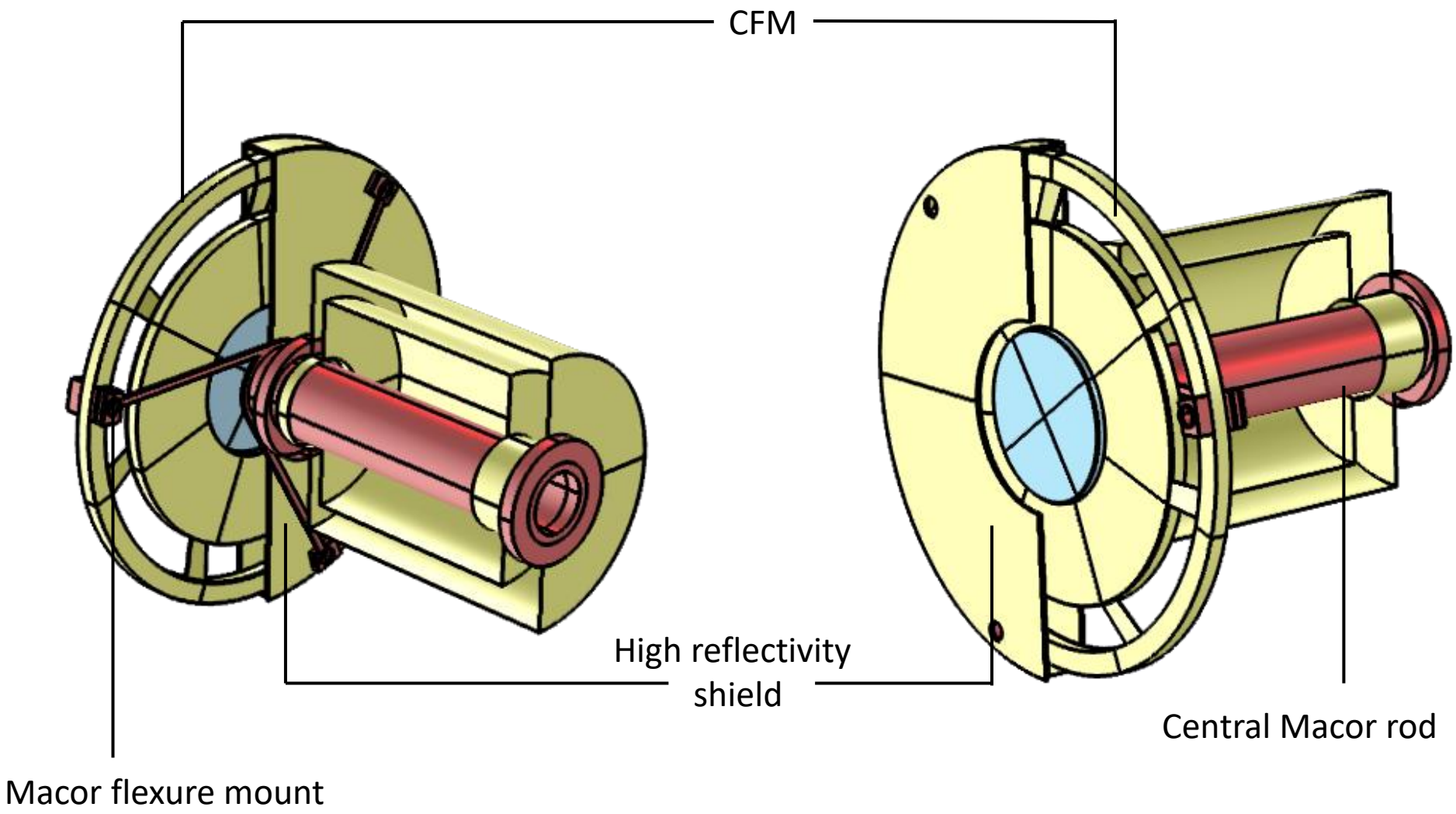

4. Thermal management design

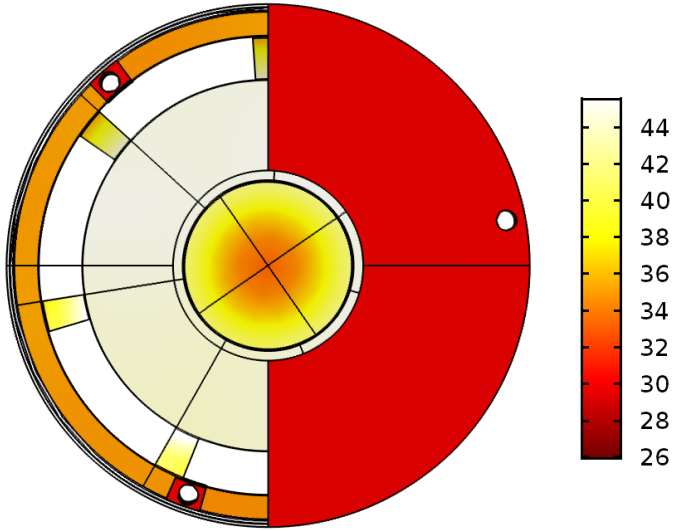

Temperature field of the CFM at 44°C operation [K]

High reflectivity shield reflects radiation back onto the CFM; lower radiative heat loss to the surroundings

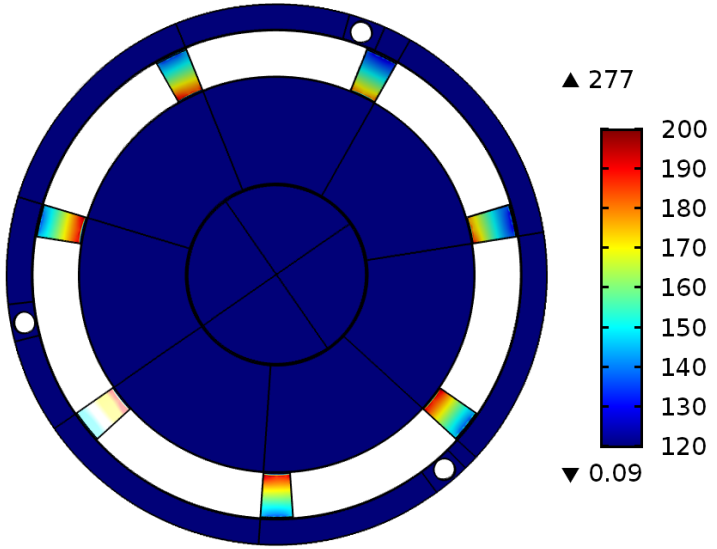

Conductive heat flux magnitude of the CFM[W/m^2]

Thin aluminum flexures increase conduction resistance. Conductive heat flux drops from 187 kW/m^2 → 130 kW/m^2

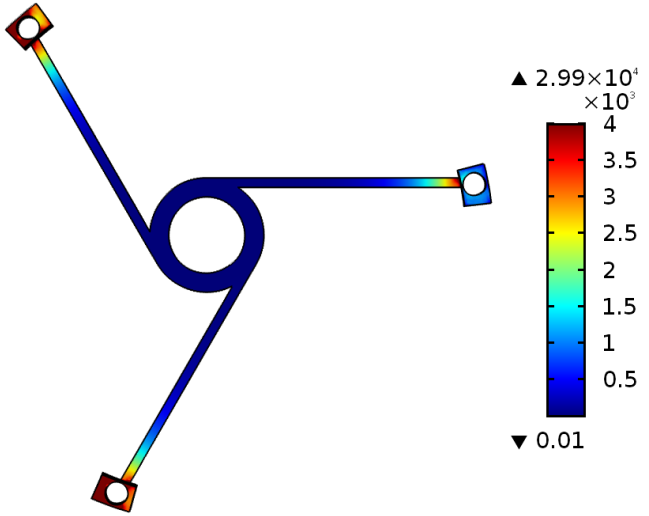

Conductive heat flux magnitude of the Macor flexure mount [W/m^2]

Thin Macor flexures with low thermal conductivity prevents heat conduction to the rest of the body. Here, reduces conductive head flux from 4.56 kW/m^2 to 8.5 W/m^2

4. Surface-to-surface radiation simulation

- Simplified 2D axis-symmetric model. Flexures of effective (reduced) cross-sectional area are used to accommodate for the 2π sweep.
- The high reflective shield keeps the surroundings isolated from the CFM

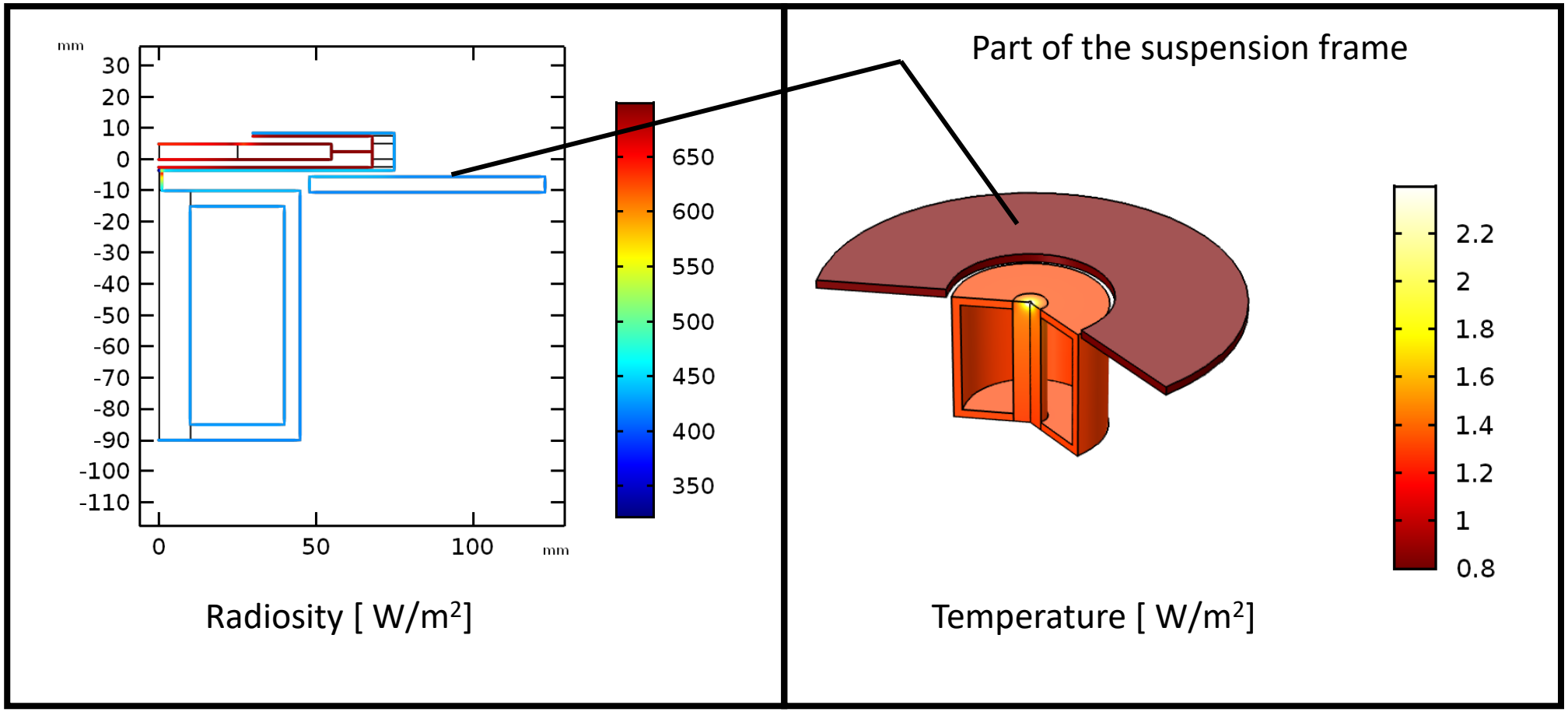

- Currently refining the simulation. Nest step: investigate transient response

5. Materials and vacuum compatibility

Components	Material	Compatibility at room temp[1]	Compatibility at elevated temp
Mirror	Fused silica	✓	Both fused silica, aluminum, gold coating and macor are used in SR3 heater. They have been tested at 87°C and 120°C, unclear what's the nominal operating temperature (https://dcc.ligo.org/LIGO-E1900220, https://dcc.ligo.org/LIGO-G1501030)
Compression ring	Aluminum	✓	
Supporting ring			
Main body			
High reflectivity shield coating	Gold	✓	
Compression ring coating	or Alumnium oxide/ aluminum nitride mix	✓	Currently used for thermal management of PD preamp, unclear what temperature tested at for vac. Compatibility (https://labcit.ligo.caltech.edu/~abbott/files/T070054-00.pdf)
Insulating flexure	Macor	✓	See above
Central rod			
Heating resistors	See next page	?	Waiting for vacuum test

[1]. Unrestricted as specified by E960050

Planning to assemble one whole unit for vacuum-compatibility testing

5. Materials and vacuum compatibility

Substrate	Aluminum Nitride	AlN
Flange	Copper	Cu
Lead	Copper	Cu
Silver Plating	Silver	Ag
Cover	Aluimina	Al2O3
Cover marking	Marking Ink	Epoxy Resin
Cover attach	Epoxy Resin	Epoxy Resin
Tin solder	Tin	Sn
Conductor Paste AlN-33	Silver	Ag
	Palladium	Pd
	Titanium	Ti
	Cobalt	Co
Nickel Plate on chip	Nickel	Ni
Tin Plate on Chip	Tin	Sn
Resistor Paste FK9611	Ruthenium Dioxide	RuO2
	ZnO glass frit	ZnO
Resistor Paste FK9615	Ruthenium Dioxide	RuO2
	ZnO glass frit	ZnO
Passivation Paste 5487	Epoxy Resin	ZnO