Thermal actuator design update

SAMS meeting (2019/11/25)

LIGO-E1900375

Huy Tuong Cao, Sebastian Ng

1. Dimension modification of CFM to fit SAMS

Previous flexure-CFM design concept (E1900318)**:**

- 160 mm total OD - **too large**
- 110 mm actuating ring diameter
- 6 mm mirror thickness

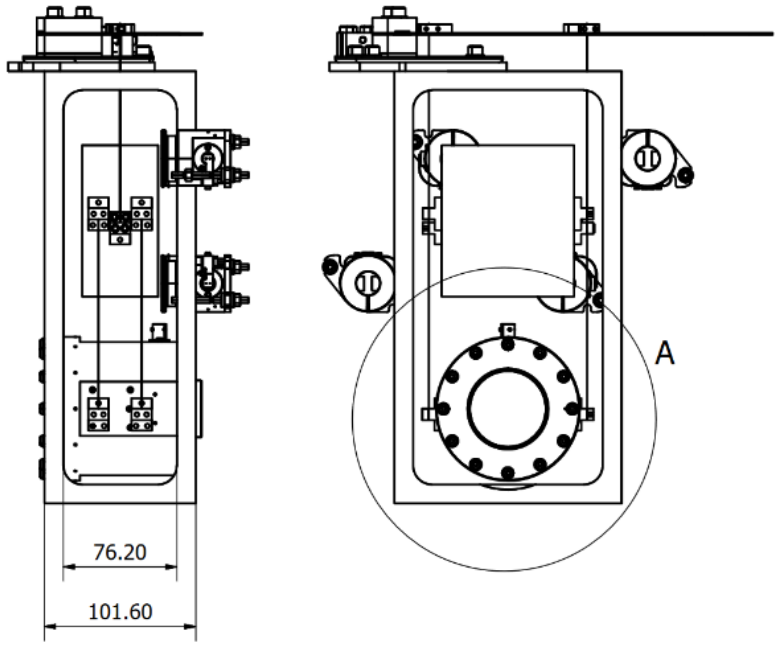

→ New design with a smaller **OD < 107 mm** (limited by height)

- Mass ring diameter can be smaller that actuating ring diameter

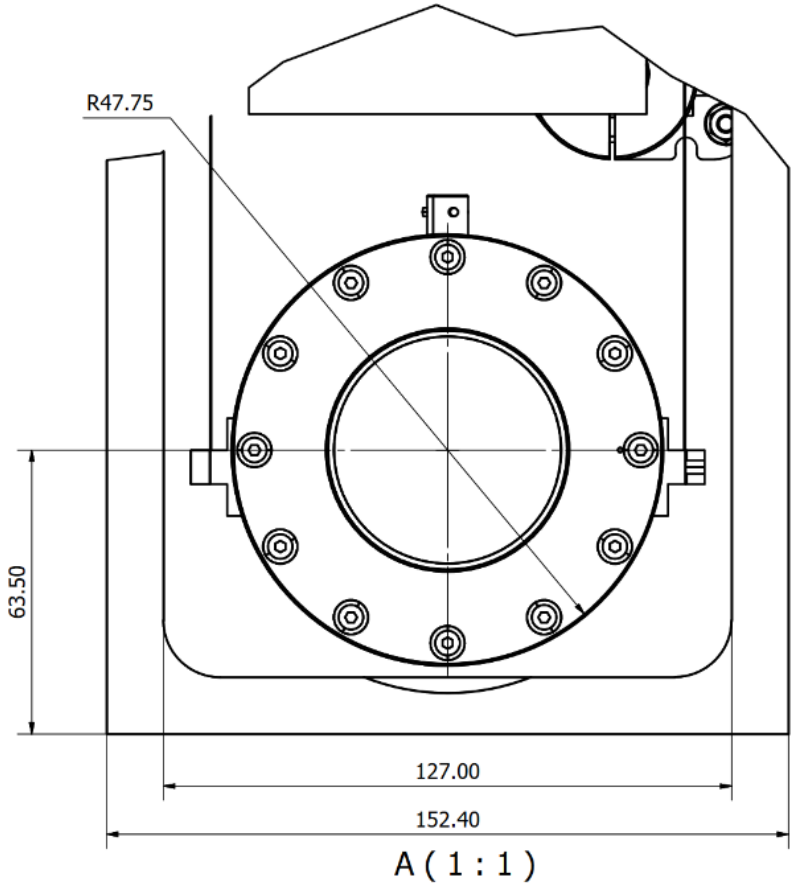

2. Modelling actuation with 5-mm mirror

Only consider mirror and actuating ring, flexure structure has negligible effect on the deformation of the CFM:

- 5-mm thick Al actuating ring
- 2.5 mm axial offset
- 75 um diametric interference

FEA modelling for *S*

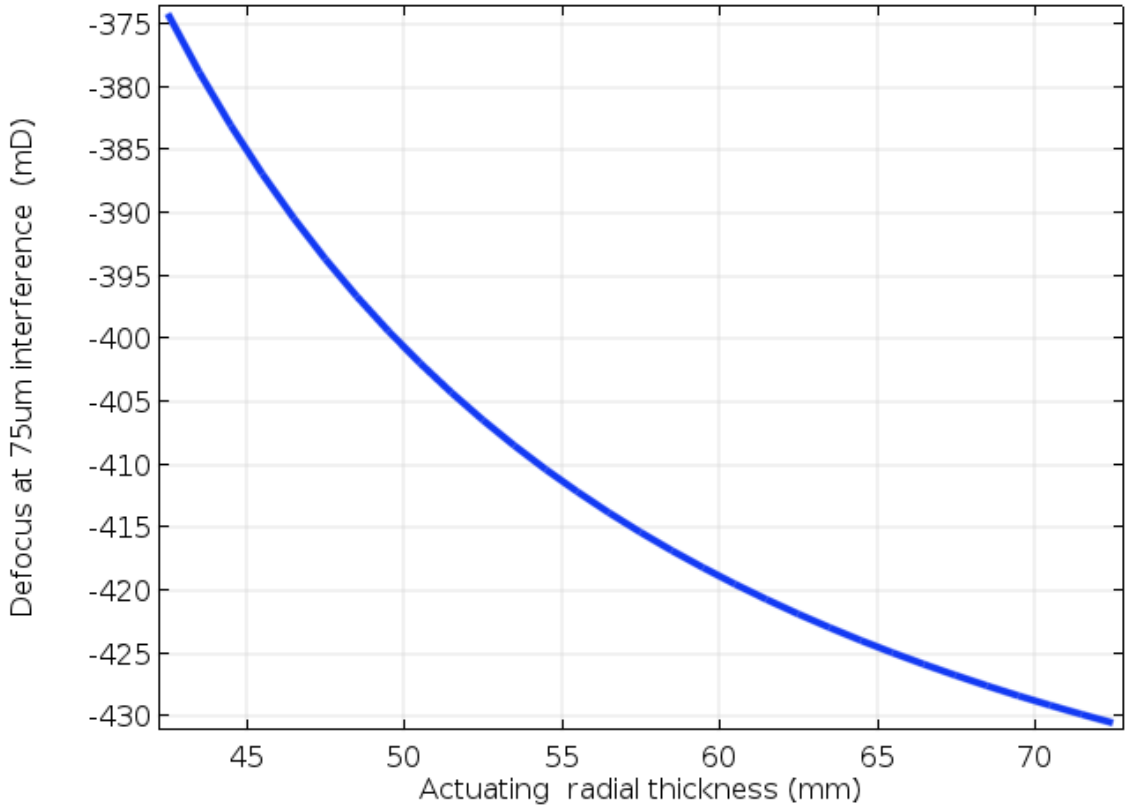

"Preloaded" defocus (S_p) as a function of actuating ring radius

- max size based on frame width => 150mm diameter, S_p = 420mD
- max size based on optical height => 100mm OD, Smax = 350mD

2. Modelling actuation with 5-mm mirror

Common solution required:

$$|S_{P,CFM}| = |\Delta S_{max}| + (|S_{CF,PDM}| + |S_{P,PDM}|)$$

$|S_{P,CFM}| \equiv$ Preload defocus of CFM

$|\Delta S_{max}| \equiv$ maximum actuation range for both actuators (200 mD)

$|S_{CF,PDM}| \equiv$ Defocus change caused by compression fit of PDM

$|S_{P,PDM}| \equiv$ Preload defocus of PDM

} Assumed to be 50 mD

"Preloaded" defocus (S_p) as a function of actuating ring radius → Compute interference required for -250 mD preloaded defocus → Maximum operating temperture

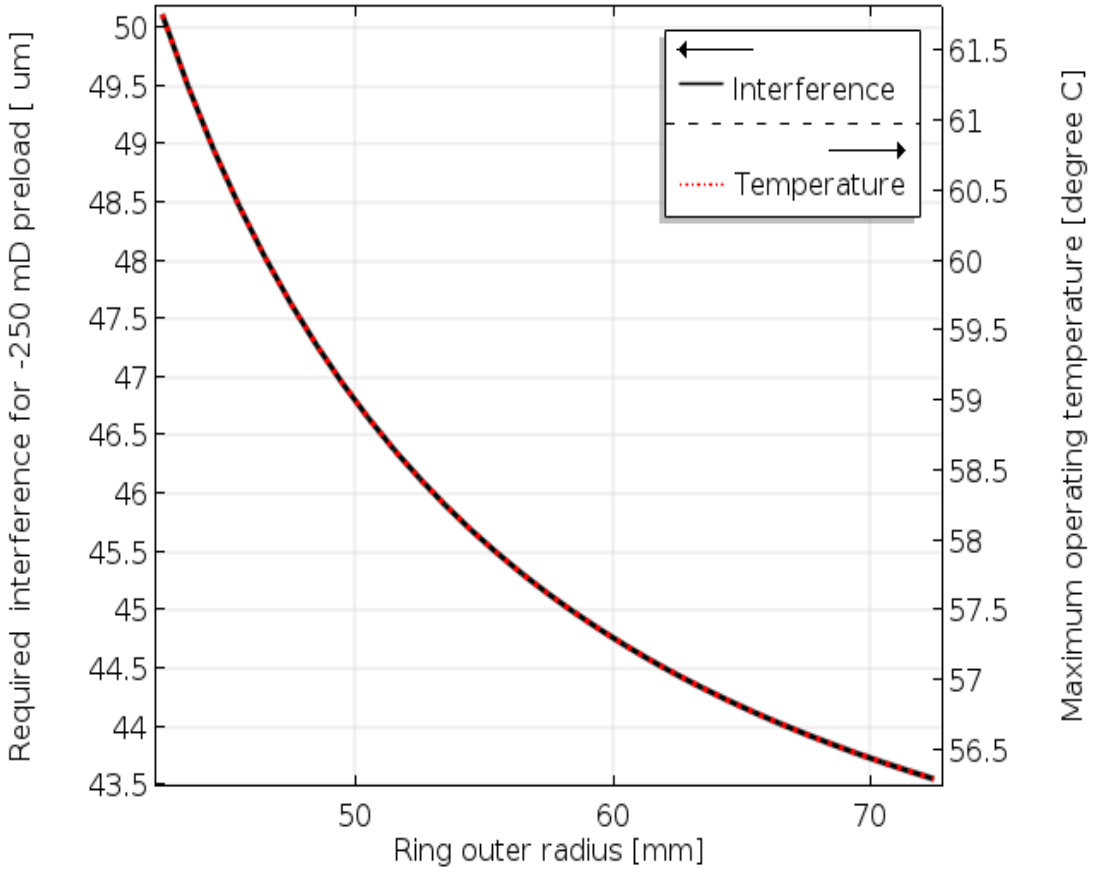

Feasible solution at smaller actuating ring diameter:
85 mm actuating ring diameter
50 um diametric interference

- Ideally the larger OD we have, the lower the temperature to achieve actuation range

2. Design of second prototype

- **Current plan**: testing a 6mm-thick mirror and a 5mm-thick mirror with one of the (already-existing) 160 mm OD CFM ring to verify the number → should obtain very large preload defocus (approx. 0.5 D)
- Redesign of flexure/mass ring is underway (Tentative structure shown below):

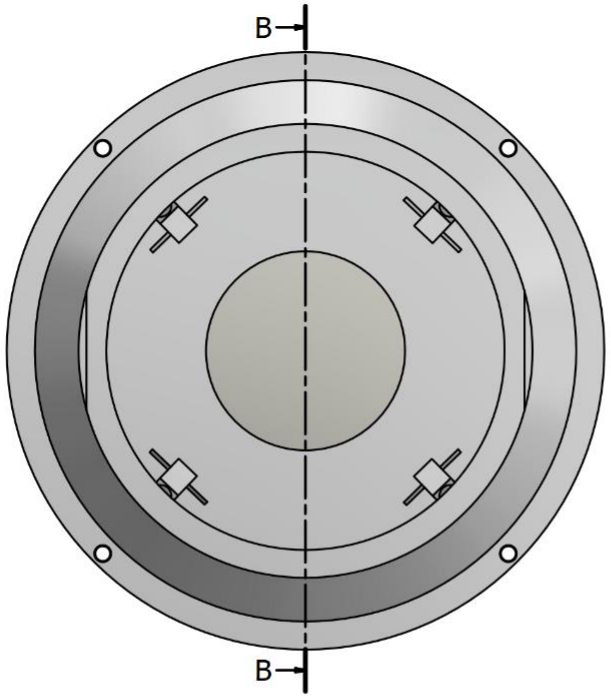

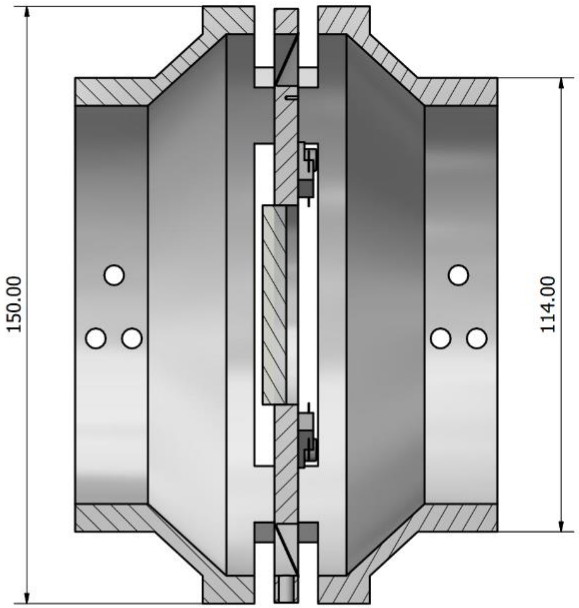

B-B (1 : 1)

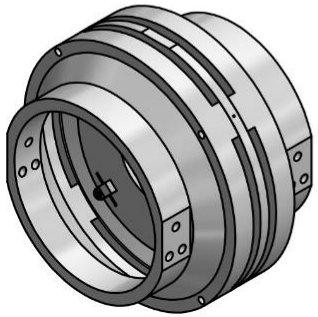

Designed by	Checked by	Approved by	Date	Date
Sebastian Ng				25/11/2019

CFMAssembly