Compression fit mirror

Design and heater options

SAMS meeting (2019/10/10)

LIGO-E1900318

Huy Tuong Cao, Sebastian Ng, Peter Veitch

1. CFM design

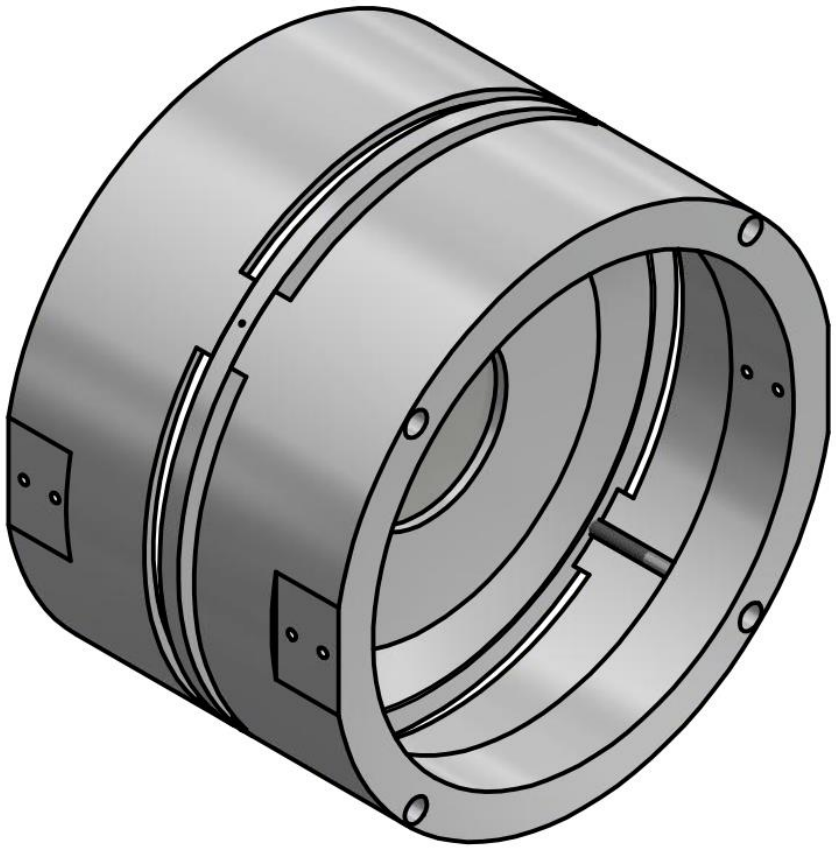

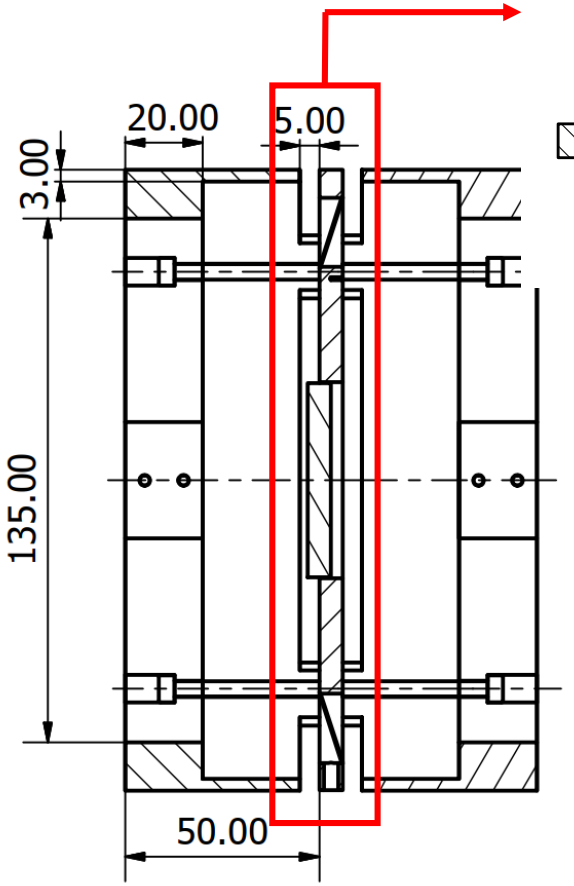

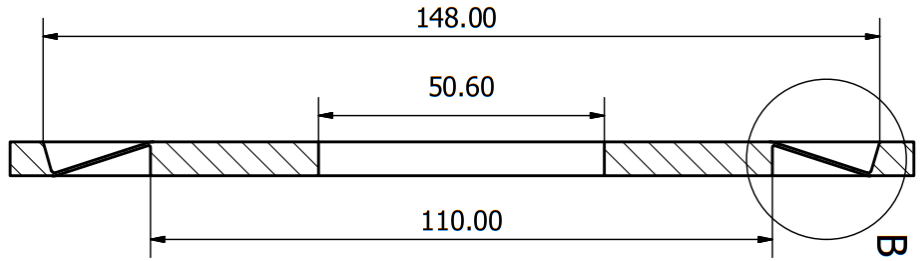

- 160mm OD Compression fit mirror:
  - 110mm OD inner ring with 6 mm thickness
  - 18 degree flexure
- Mass rings added on both sides to increase total mass of the bottom stage
- To maintain the CFM at 60°C for maximum actuation range (c.a. 200 mD), heating powers required are:
  - Approx 2 W for $\varepsilon_{Al} = 0.1$ (uncoated Al)
    - Thermal time constant ~ 1hour
  - Approx 10 W for $\varepsilon_{Al\text{-}Al_2O_3} = 0.9$ (aluminum oxide flame sprayed Al)
    - Thermal time constant ~ 20-30 minutes

2. Heating options

Assume **28-gauge wires**, current < 100 mA

	Contact heating: thin film ceramic resistor	**Contact heating:** Watlow ceramic heater	**Radiative heater:** Watlow ceramic heater
	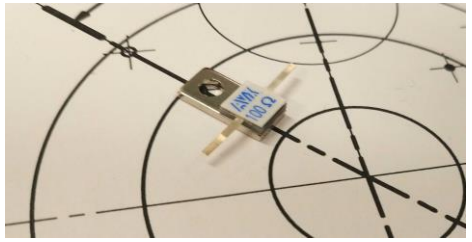		
Model	478-7035-ND	CER-1-01-00540	CER-1-02-00002
Resistance/element	100Ω	5.8Ω	74Ω
Current (4xelements in series @ 2W)	70 mA	295 mA	NA
Current (4x elements in series @ 10W)	160 mA	660 mA	NA
Current (10x elements in series @ 10W)	100mA	415 mA	NA

2. Heating options

	Contact heating: thin film ceramic resistor	**Contact heating: Watlow ceramic heater**	**Radiative heater: Watlow ceramic heater**
model	478-7035-ND	CER-1-01-00540	CER-1-02-00002
Resistance/element	100Ω	5.8Ω	74Ω
Current (4xelements in series @ 2W)	70 mA	295 mA	NA
Current (10xelements in series @ 10W)	100mA	415 mA	NA
Vacuum test	Not yet	CER-1-02-00001 has been tested and approved	CER-1-02-00001 has been tested and approved
Pros	- Can meet current requirement - Off-the-shelf availability - Higher resistance may be available	- Similar products has been tested and approved for UHV use	- No heating wire included in suspension architecture - Similar products has been tested and approved for UHV use
Cons	- Not yet vacuum tested	- Impossibly large number of elements required given resistance and current requirement - Custom elements may have long lead time	- Significantly slower thermal time constant - Heating of surroundings components - Added complexity