Thermal actuator update

1kg-CFM prototype fabrication update

SAMS meeting (2019/07/11)

LIGO-E1900205

Huy Tuong Cao, Sebastian Ng

1. 1kg-CFM design

1kg-compression fit mirror prototype:

- 6 mm thick, 2-inch flat mirror
- Aluminium ring optimized for actuation rate:
  - 6 mm thick
  - 90 mm diameter
- Three segments of 0.5 mm thick 18.5 degree conical flexure
- Steel rings increase mass
- Vented bolts and spacers control conduction between rings

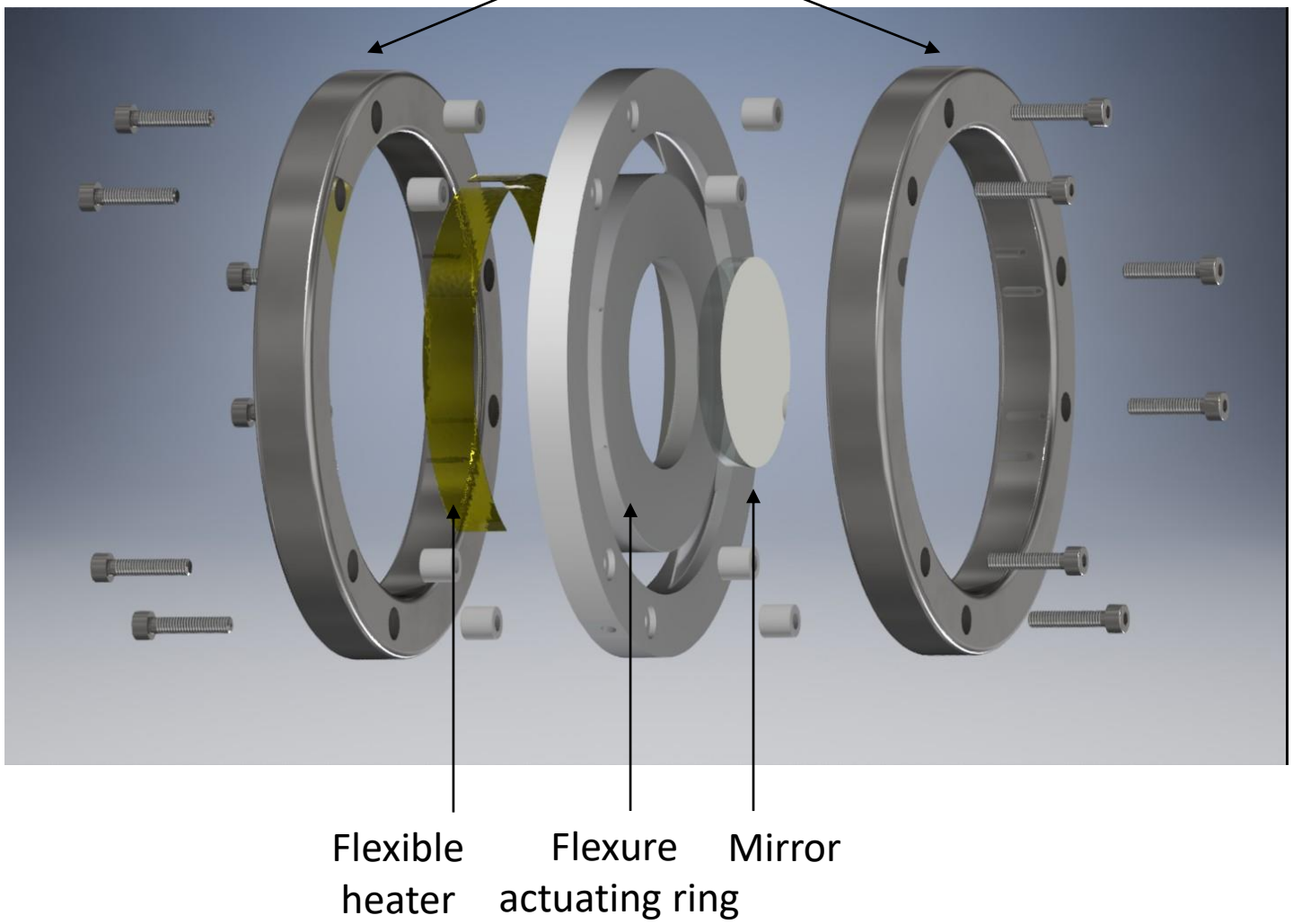

1. 1kg-CFM design

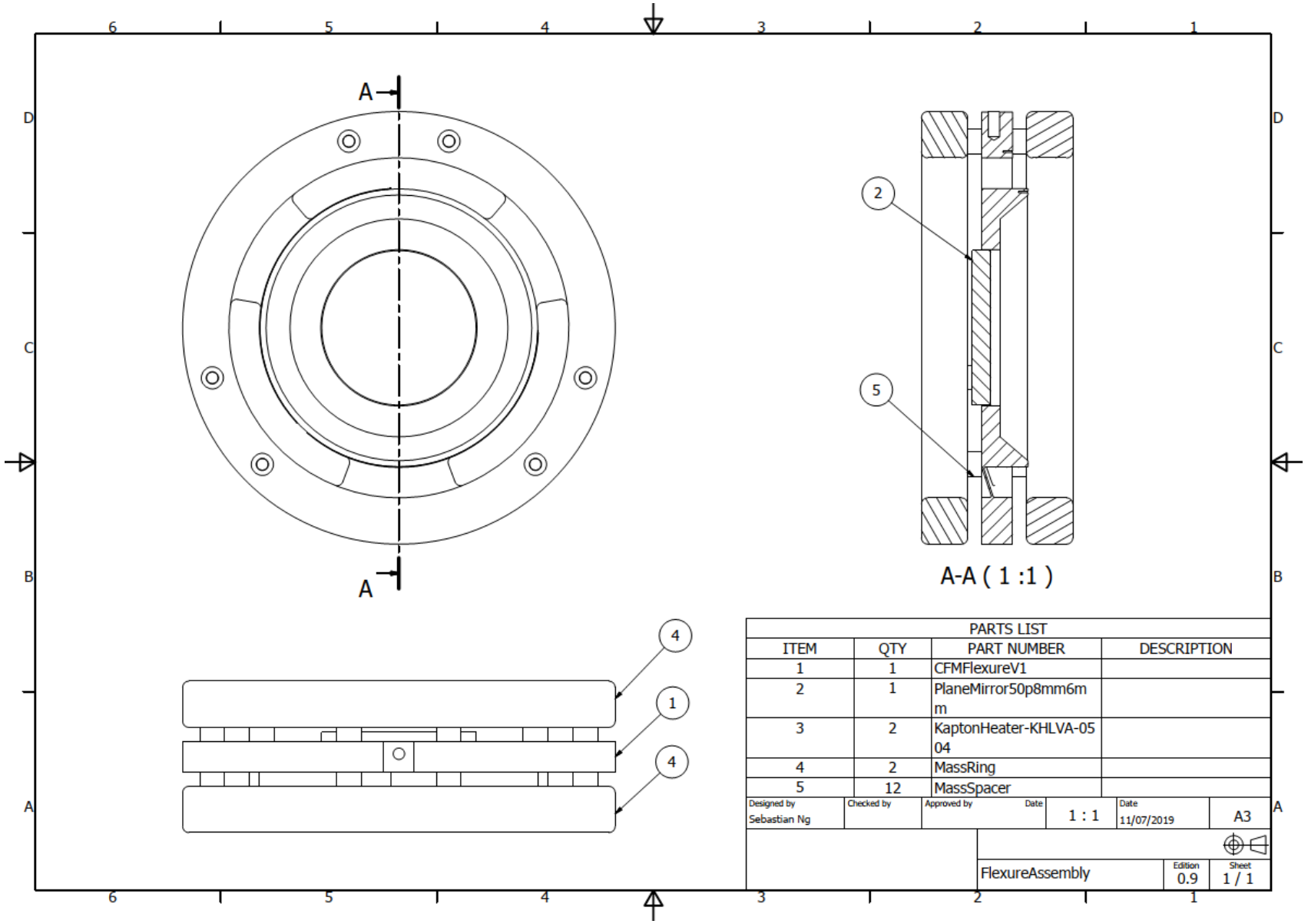

PARTS LIST			
ITEM	QTY	PART NUMBER	DESCRIPTION
1	1	CFMFlexureV1	
2	1	PlaneMirror50p8mm6mm	
3	2	KaptonHeater-KHLVA-0504	
4	2	MassRing	
5	12	MassSpacer	

Designed by	Checked by	Approved by	Date		Date	
Sebastian Ng			1 : 1		11/07/2019	A3

FlexureAssembly	Edition	Sheet
	0.9	1 / 1

1. 1kg-CFM design

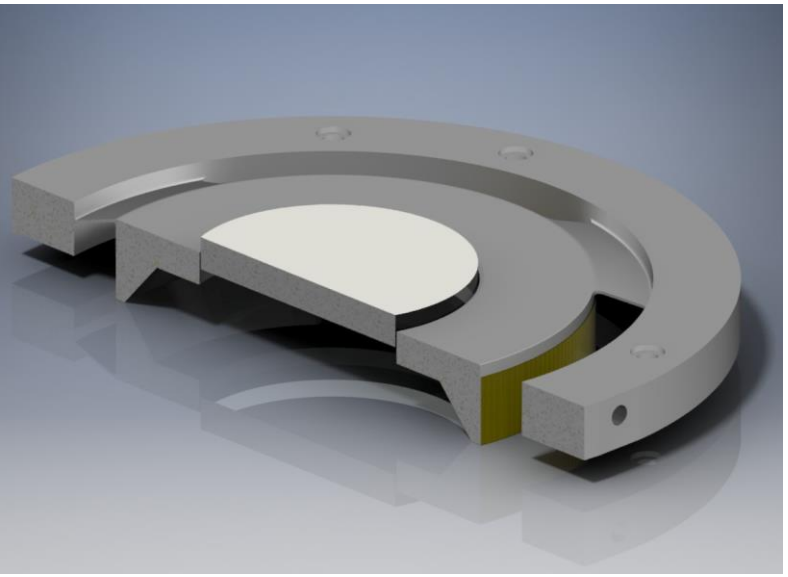

Flexure actuating ring

Barrel of aluminium actuating ring extended to 15 mm to support linear Kapton heater

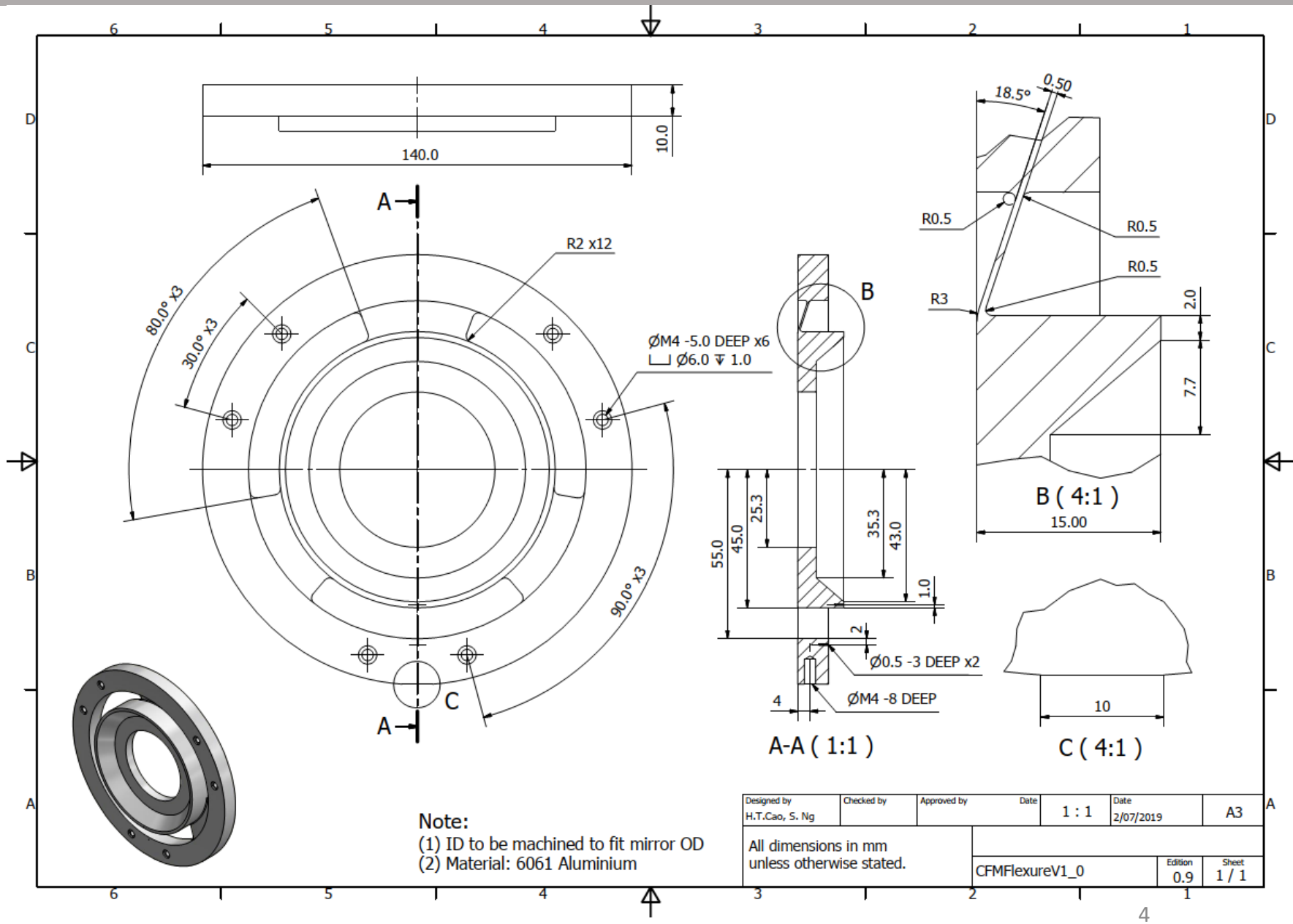

1. Why flexure ring?

- Reduced mass of central actuation ring increase actuation rate
- Thermal isolation between CFM and mirror holder minimizes conduction into suspension wires
- Increased surface area-to-volume ratio of support structure further improves actuation rate
- 18.5 degree flexure angle compensates for the shift in centre of mass of assembly due to actuation
- Mounting brackets attached to support rings minimise constraints to actuation ring

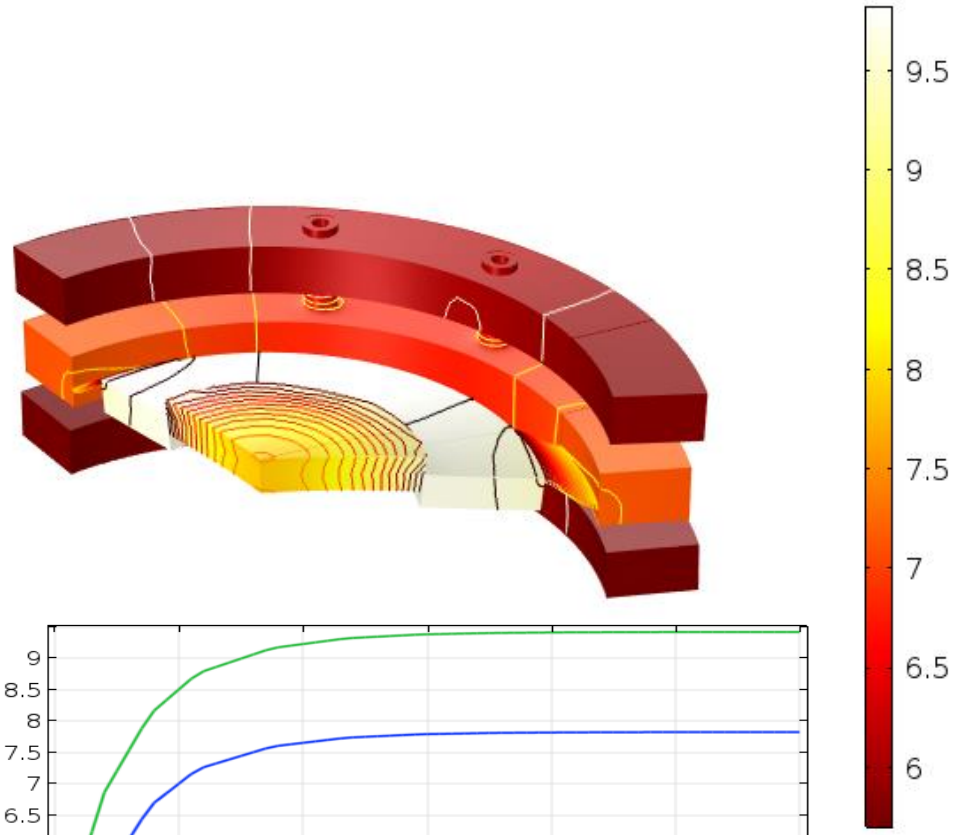

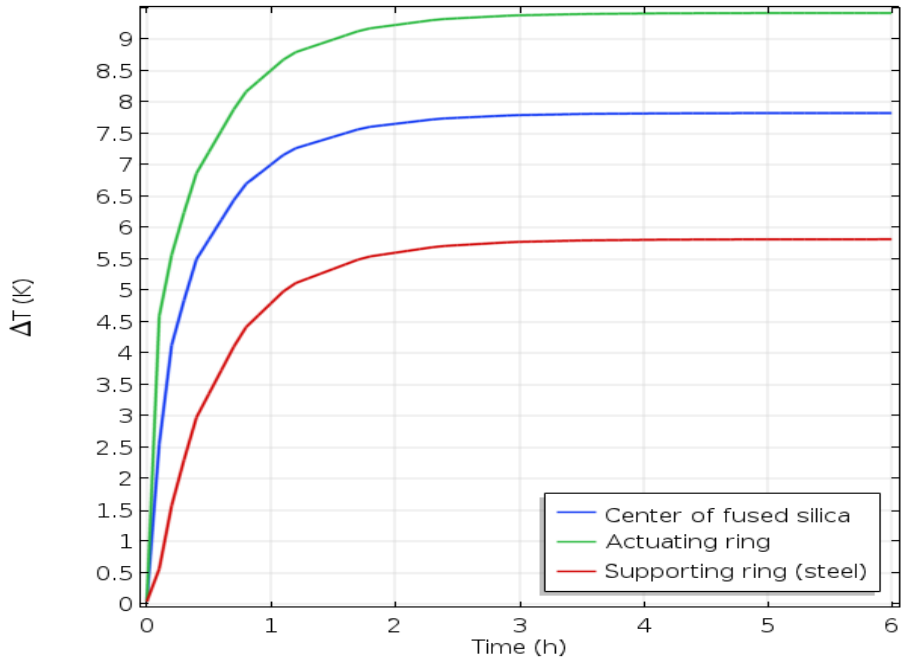

1. Initial machining of flexure – Actuating ring

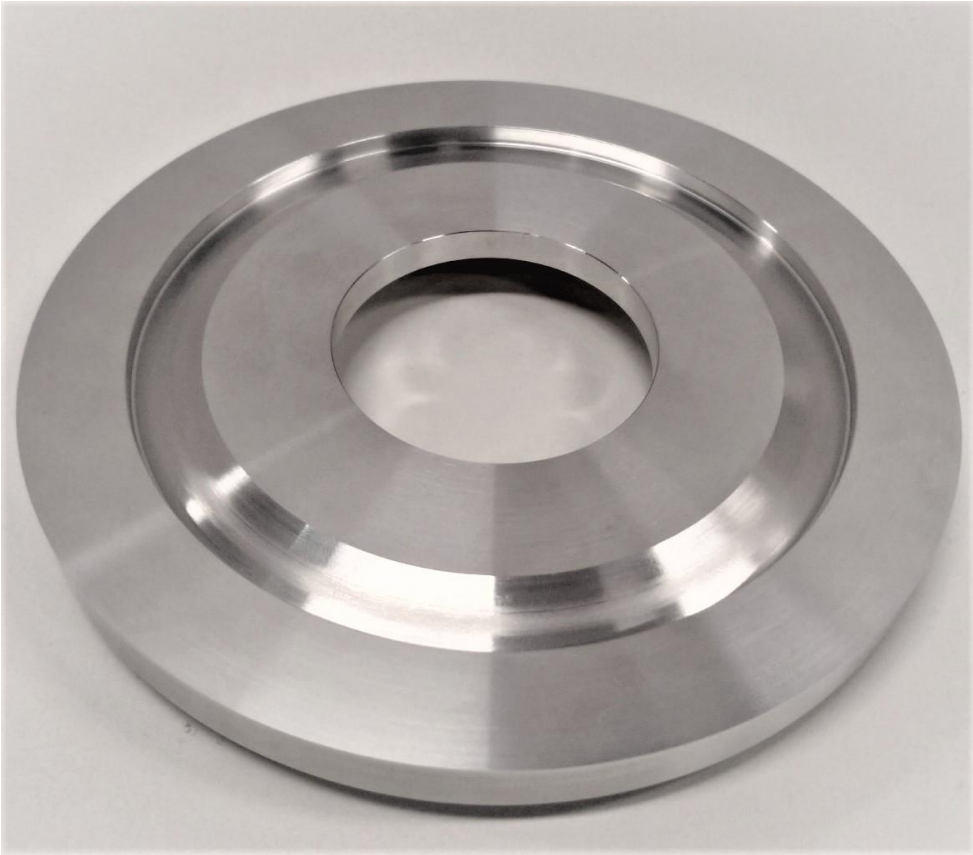

Front surface



Rear surface

2. Heating consideration

2.1. Coating to improve heat transfer rate:

- Heat transfer dominated by radiation. Limited by emissivity of aluminium (~0.03)
- High emissivity coatings significantly decrease thermal time constant:
  - flame sprayed aluminium oxide (0.96)
  - aluminium oxide-aluminium nitride mix (0.86)
  - T070054, used for in-vacuum thermal management of ISC-photodiode preamp assembly (E960050)

2.2. Heater options:

- *Contact heater:*
  - More efficient than radiative
  - Commercial heaters available
    - OMEGA Kapton heater HLVA-0504/10P purchased for prototype requires vacuum compatibility trials
    - Enquiries made for custom units to optimize heater current
  - Custom laser cut NiCr foil with polyimide coatings to adhere the foil onto CFM
    - NiCr wires vacuum compatible?
    - Polyimide Dupont PI-2525 is vacuum compatible –T080148
  - Care to prevent seismic short due to heater wires
- *Radiative heater:*
  - No seismic short risk but less efficient
  - NiCr wire wound ceramic heater in similar fashion to ring heater.