Thermal actuator upgrade

1. Thermal requirement modelling updates (cont.)
2. Static deformation test (2” PPM, 2” PCM, 1” PPM)
3. Preliminary results for 2” PPM thermal loading

SAMS meeting (2019/05/22)

LIGO-E19

Huy Tuong Cao, Sebastian Ng

1. Thermal requirement modelling: effects on dithering coil

Temperature of BOSEM due to drive current:

1.1. Effect of heating on magnet:

- Assume magnets are directly mounted on CFM → T=60°C @ thermal equilibrium.
- Reduction in magnetization (magnetic moment per unit volume - M) with increasing temperature.
- M can be estimated using remanence magnetic field B_r:

$$M \approx \frac{B_r}{\mu_0}$$

- Reversible temperature coefficient (*RTC*) gives change in B_r w.r.t T:

$$RTC = \frac{\Delta B_r}{B_r}\frac{1}{\Delta T}100\%$$

→ ΔM with change in T.

- Following T1000164 : $d\boldsymbol{F} = \nabla(\boldsymbol{M} \cdot d\boldsymbol{B})$
  - $d\boldsymbol{B}$ ≙ magnetic field due to a coil element with current density $\boldsymbol{J} = (jx, jy, jz)$
  - $d\boldsymbol{F}$ ≙ force on a magnetic dipole moment placed in this field.
  - $\boldsymbol{M} = (0,0,M_z)$ ≙ magnet's magnetization, edge effects ignored

  → $d\boldsymbol{F} = M_z \nabla dB_z$ → Change in force coupling constant (K_c) is proportional to the change is temperature

Magnets	Material	RTC (%/°C)	$\frac{\Delta M}{M}(\Delta T = 40^o C)$	$K_c(20^o C)$(N/A)	$K_c(60^o C)$(N/A)
⌀2 x 3mm	SmCo 2:17	-0.035	-0.014	0.021	0.0207
⌀5x10 mm	NdFeB	-0.1	-0.04	0.393	0.388

1. Thermal requirement modelling: effects on dithering voice coil

1.2. Required current and supplied voltage:

Mass and inertia of baseline CFM (T1900270):

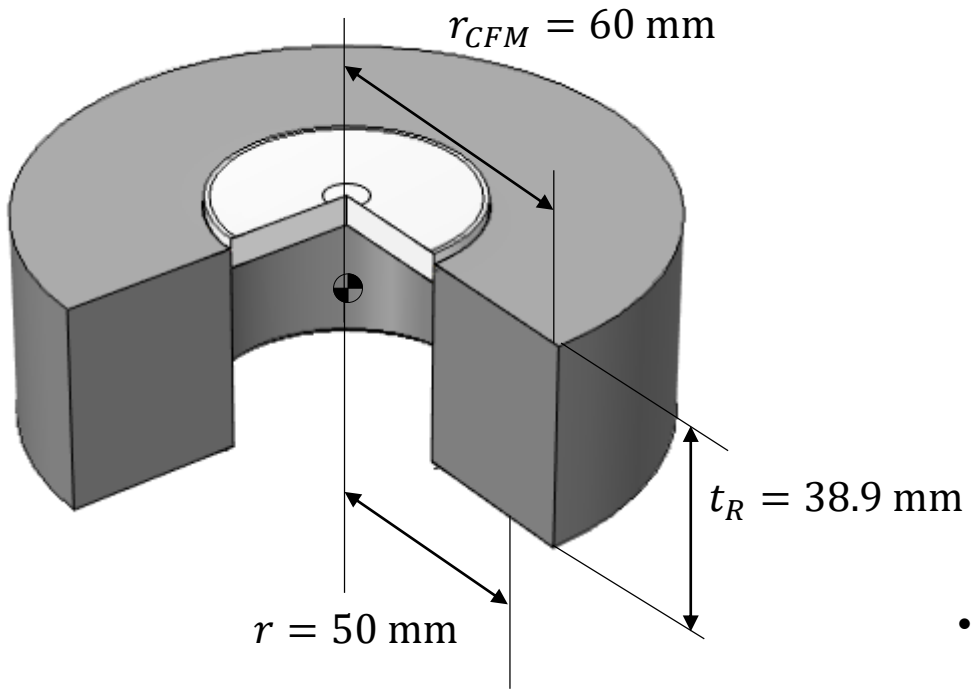

CFM mass: $M = 1$ kg

Moment of inertia :$J_{xx} = 1170\ \text{kg} \cdot mm^2$

Apparent mass to voice coil:

$$m = \frac{J_{xx}}{4r^2} = 0.117\ \text{kg}$$

- *Following Mikyun's lumped mass model analysis (E1900051):*

Required coil current: $I_c = \frac{m\omega^2 r\theta_d}{K_c}$

Required supplied voltage: $V_o = (2\,R_s + Z_c)\,I_c$

where (assumed current BOSEM + driver design – which can be changed)*:

	Parameters	Values
ω	Dithering frequency	2π [2,3]kHz
θ_d	Dithering amplitude	[0.5,5]nrad
R_s	Series resistance of driver	1200 Ω**
Z_c	Coil impedance of equivalent lumped mass model (for CFM)	$42.7\Omega + j149.5\Omega$

*see G1100968, T1200264

- *Estimating temperature of BOSEM coil given required current:*
  - Using current-temperature fit results from T1400341:

$T_c(I) = 0.0059I^2 - 0.4579I + 32.525, I \geq 50\ mA$

  - This result is for a pack of 8 BOSEM spaced closely together

→ Likely to be an overestimation in our case

  - Invalid for $I < 50\ mA$

1. Thermal requirement modelling: effects on dithering voice coil

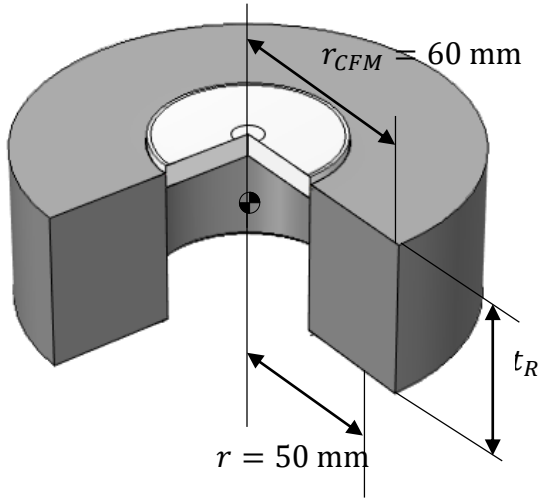

CFM mass: $M = 1$ kg
Moment of inertia :$J_{xx} = 1170\ \text{kg} \cdot mm^2$
Apparent mass to voice coil:

$$m = \frac{J_{xx}}{4r^2} = 0.117\ \text{kg}$$

- Joule heating of coil due to current is small and not limited by outgassing
- Heat transfer is dominated by heat conduction rather than radiative → requires information on contact area with frame, mass, emissivity assumed to be 0.1?
- Detailed modelling of BOSEM requires FEA (is FEA model as in T1400341 available?) although expecting radiative effect to be small
- Similar to piezo actuator, requires $1200\ \Omega$ R_s to revert back to 1200

Case 1

$R_s = 1200\ \Omega$,
$K_c = 0.0207$ N/A (ϕ2x3 SmCo 12:7 magnet @ 60°C)

θ_d [nrad]	I_c	V_o	T_c	
0.24	10.9 mA	27.9 V	-	Max

Case 2

$R_s = 100\ \Omega$,
$K_c = 0.0207$ N/A (ϕ2x3 SmCo 12:7 magnet @ 60°C)

θ_d [nrad]	I_c	V_o	T_c	
0.5	22.3 mA	7.93 V	-	Lower req.
1.76	78.5 mA	27.9 V	32.9°C	Max

Case 3

$R_s = 100\ \Omega$,
$K_c = 0.0388$ N/A (ϕ5x10 NdFeB magnet @ 60°C)

θ_d [nrad]	I_c	V_o	T_c	
0.5	1.2 mA	0.42 V	-	Lower req.
5	11.9 mA	4.23 V	-	Higher
33	78.6 mA	27.9 V	32.9°C	Max

2. Static deformation: remeasure deformation of 1” mirror

- Remeasure static deformation curvature is measured for 1”-optics CFM

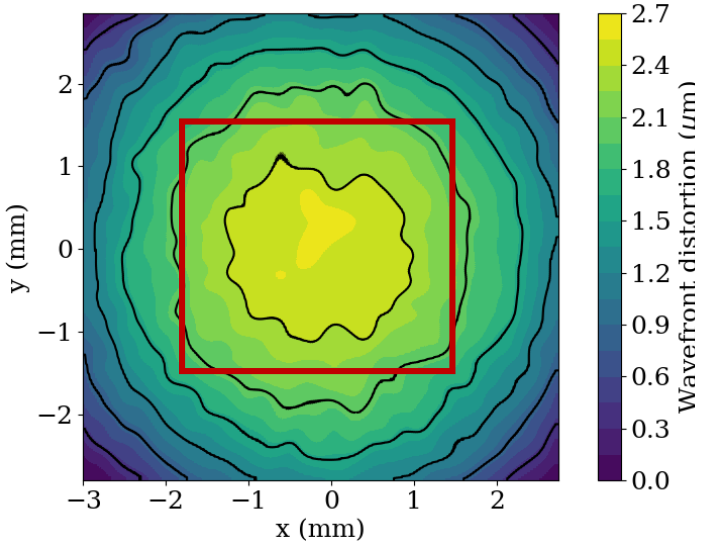

December 2018

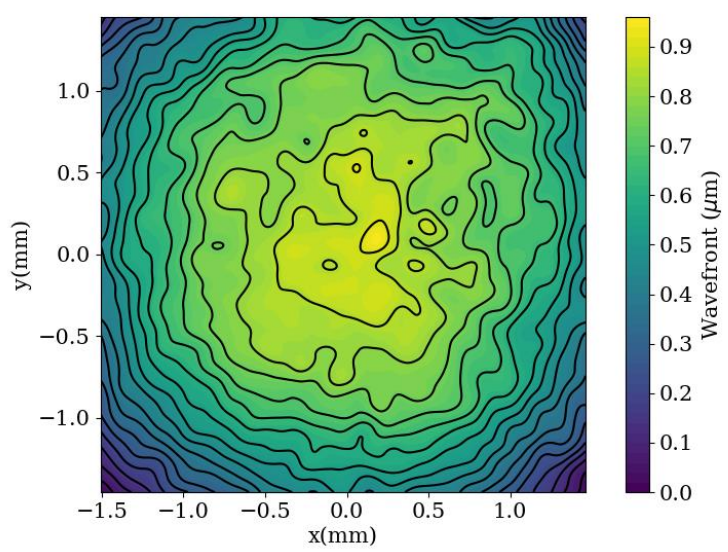

May 2019

- Magnification of telescope for imaging on Hartmann sensor: $M = 3.66 \pm 0.02$
- Result from December 2018: $S = 314$ mD ($M \approx 2$)
- Recent measurement: $S = 316 \pm 5$ mD

→ No significant change in mirror’s curvature after 6 months.

- Some tweaks in alignment of system for better spatial noise in underway.

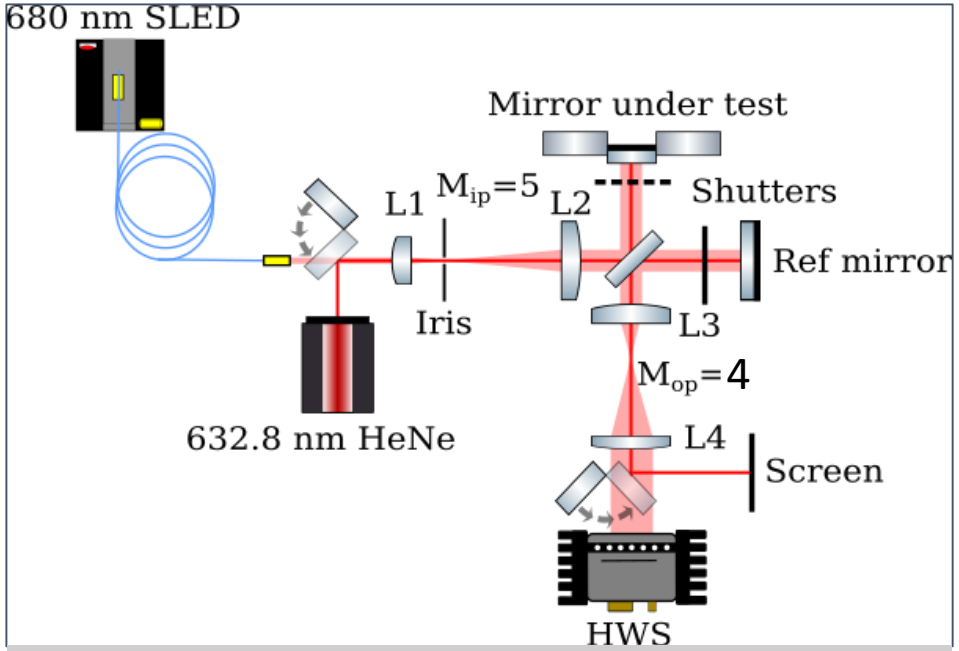

Set up to measure static deformation of CFM

2. Static deformation: deformation of 2” mirror

Plano-plano mirror	Plano-concave mirror
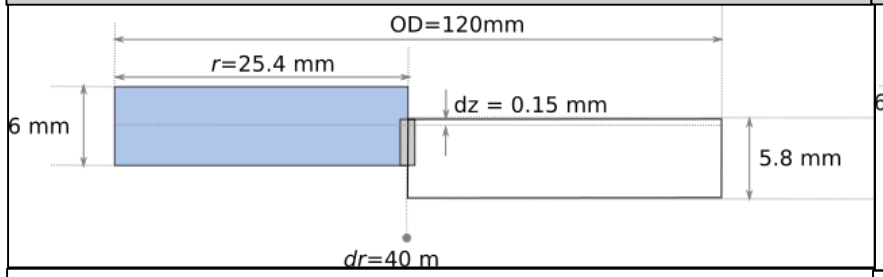	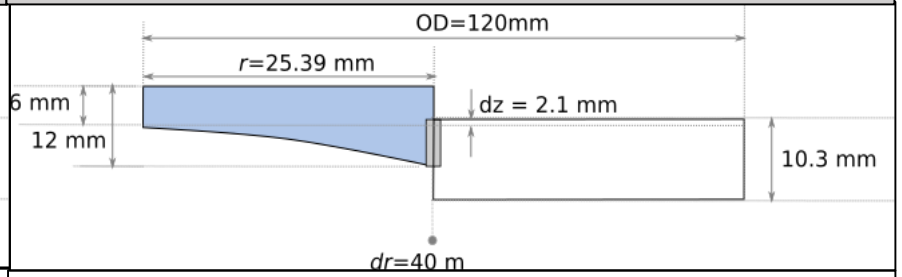
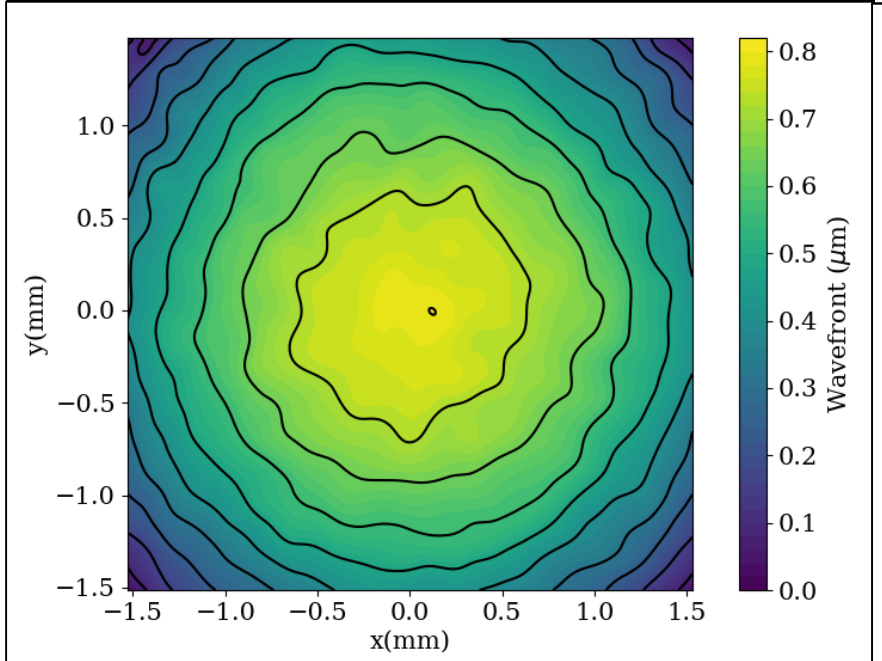	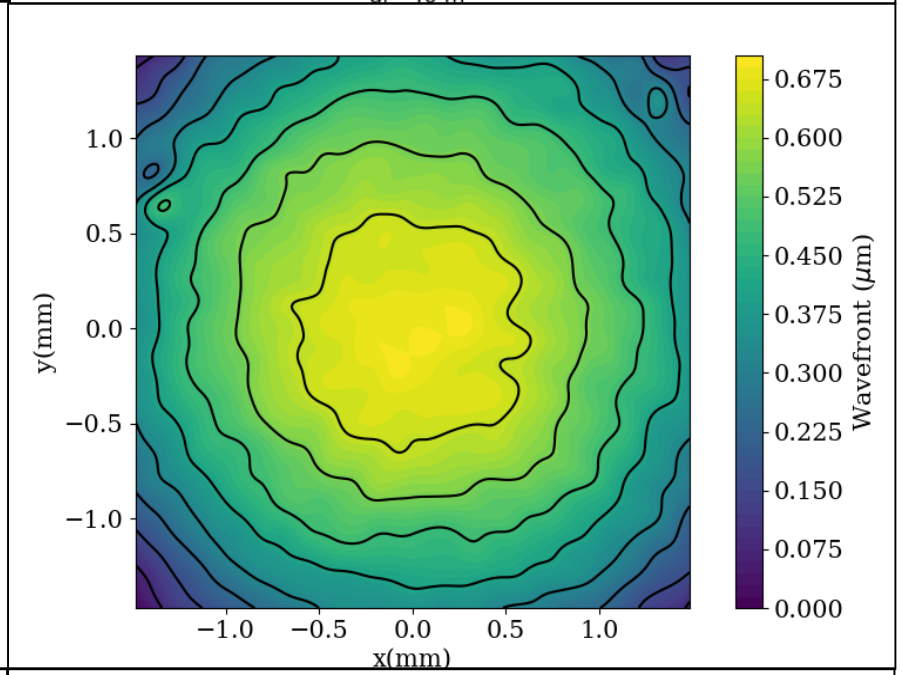
$S = 337.8 \pm 4.8$ mD	$S = 319.1 \pm 4.5$ mD

- Flat mirror CFM curvature agrees closely with COMSOL FEA model.
- Planoconcave result was lower than expected, potentially caused by error in interference.
- Testing with thermal loading to confirm dS/dT rate to verify FEA model

3. Thermal loading: preliminary results for 2” flat CFM

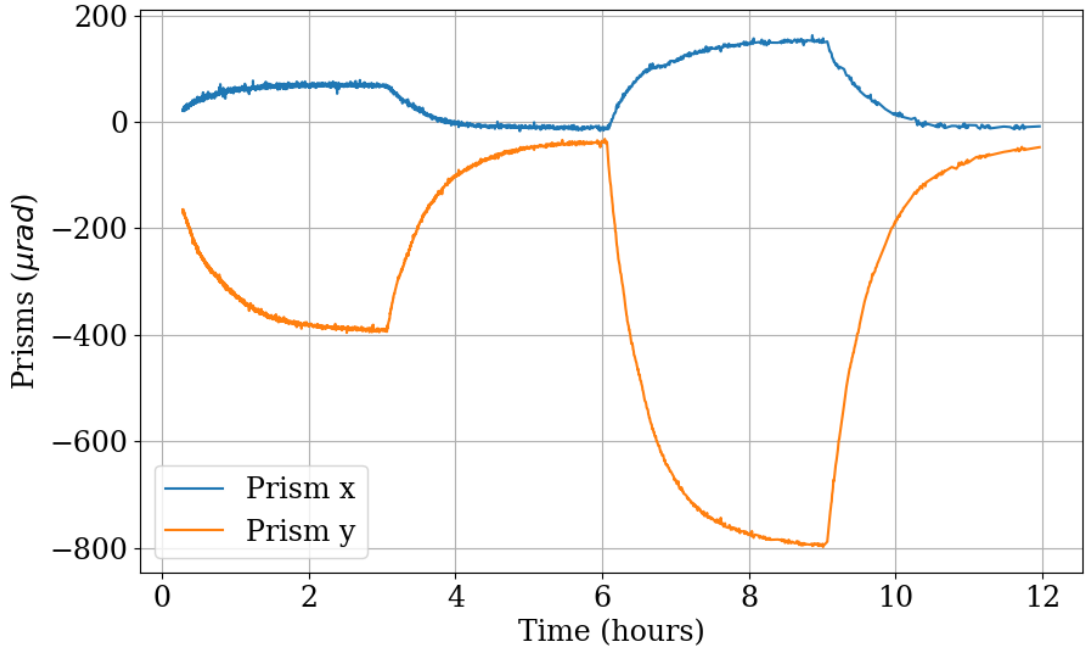

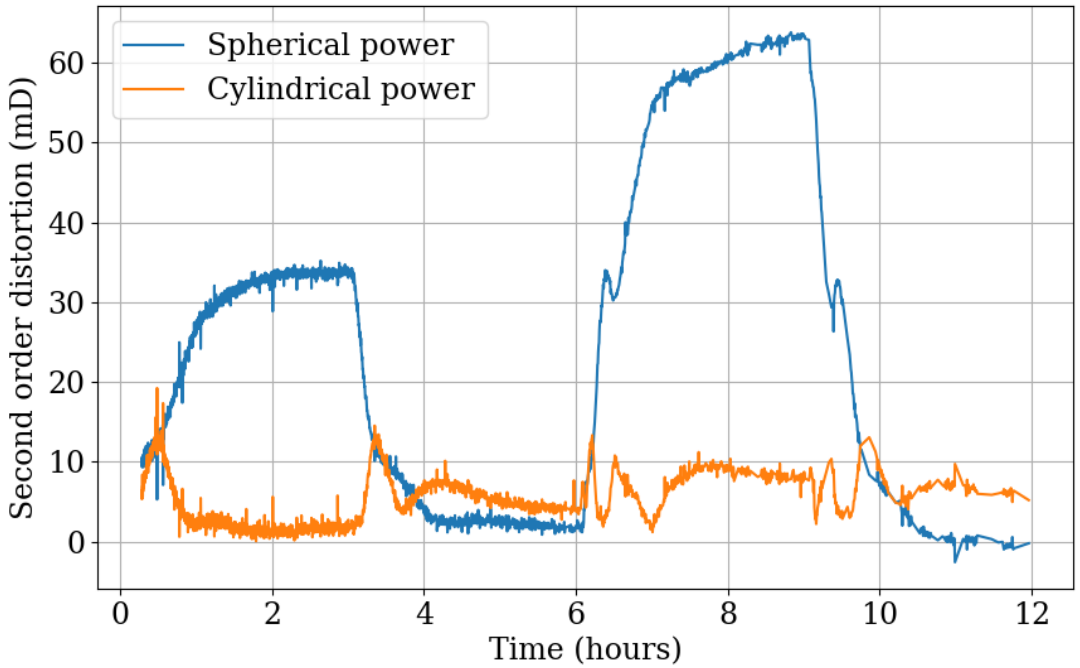

- CFM was mounted on 0.5” post as heat was applied
  → Strong negative change in pitch as the CFM deformed and pivoted about the bottom point
  → Potential cause of small cylindrical power observed
- $\Delta S = 63\ \mathrm{mD}$ at $\Delta T = 9.3\ \mathrm{K}$, hence $\frac{dS}{dT} = 6.77\,\frac{\mathrm{mD}}{\mathrm{K}}$, in good agreement with FEA result ($6.5\,\frac{\mathrm{mD}}{\mathrm{K}}$)
- The mirror has now been suspended to allow free distortion, new results to be expected by next week.

4. Summary

- Thermal effects on dithering coil:
  - Increasing temperature reduces dithering force at a given driving current
  - Required increase in driving coil to maintain dithering force results in insignificant rise in coil temperature
  - Coils are unlikely to be limited by outgassing
  - More information + FEA modeling are required to accurately predict the effect of radiation on temperature of voice coil
- Static deformation:
  - 1” CFM unchanged over 6 months
  - 2” CFM – flat mirrors curvature agreed with simulation
  - 2” CFM – plano-concave curvature lower than expected, deformation rate check required to verify
- Thermal loading prelim result:
  - 2” CFM – flat mirrors deformed at rate consistent with simulation