Thermal actuator upgrade

1. 2-inch CFM assembly test
2. Mirror's deformation and temperature coupling in CFM-flexure holder

SAMS meeting (2019/04/11)

LIGO-E1900073

Huy Tuong Cao, Sebastian Ng, Peter Veitch

1. Assembly of 2-inch CFM

Plano-plano mirror	Plano-concave mirror
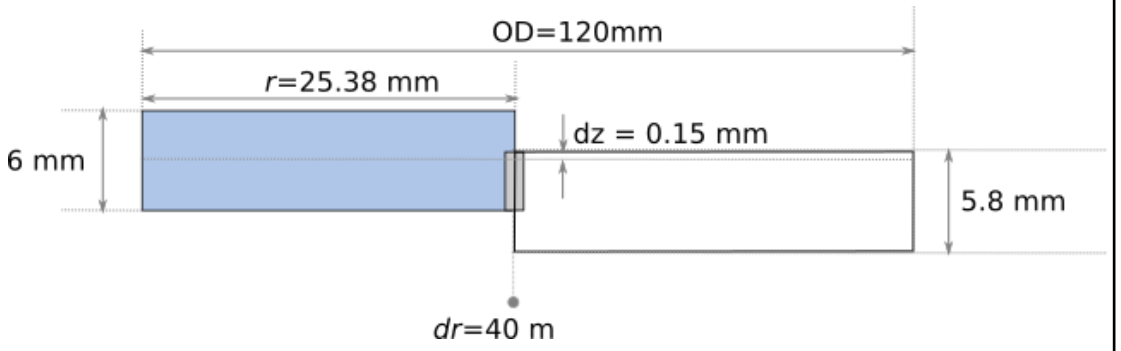	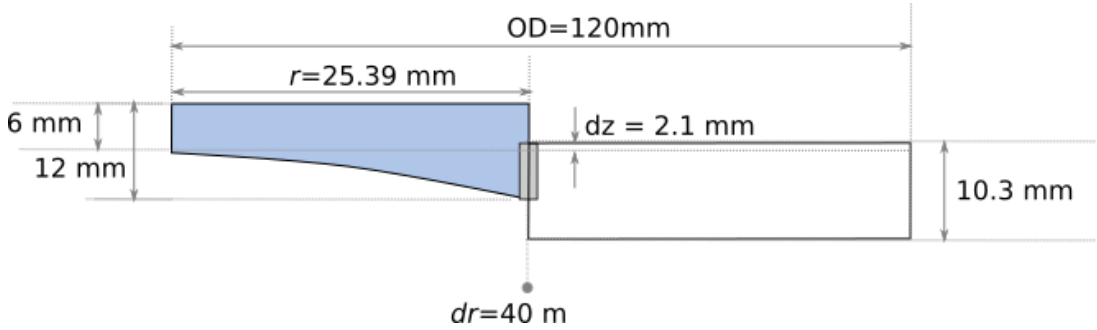
➢ Measured mirror OD: 50.75 mm ➢ Interference: 40 µm ➢ OD: 120 mm ➢ Ring actuator thickness: 5.8 mm ➢ Ring actuator offset dz: 0.15 mm	➢ Measured mirror OD: 50.77 mm ➢ Interference: 40 µm ➢ OD: 120 mm ➢ Ring actuator thickness: 10.3 mm ➢ Ring actuator offset dz: 2.1 mm

1. Assembly of 2-inch CFM

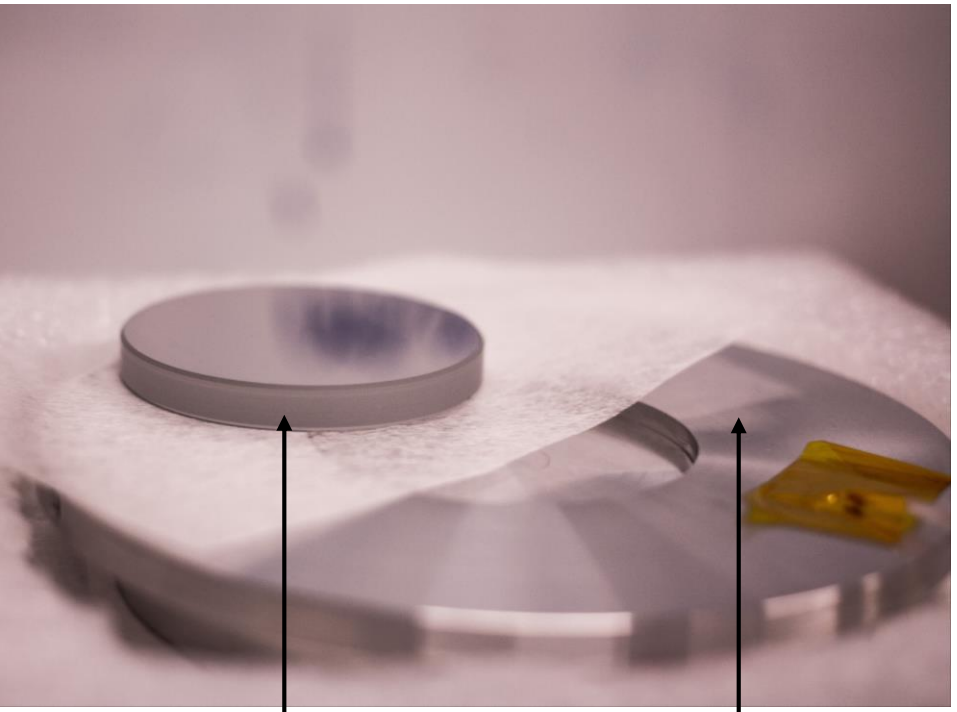

Mirror

Actuating ring

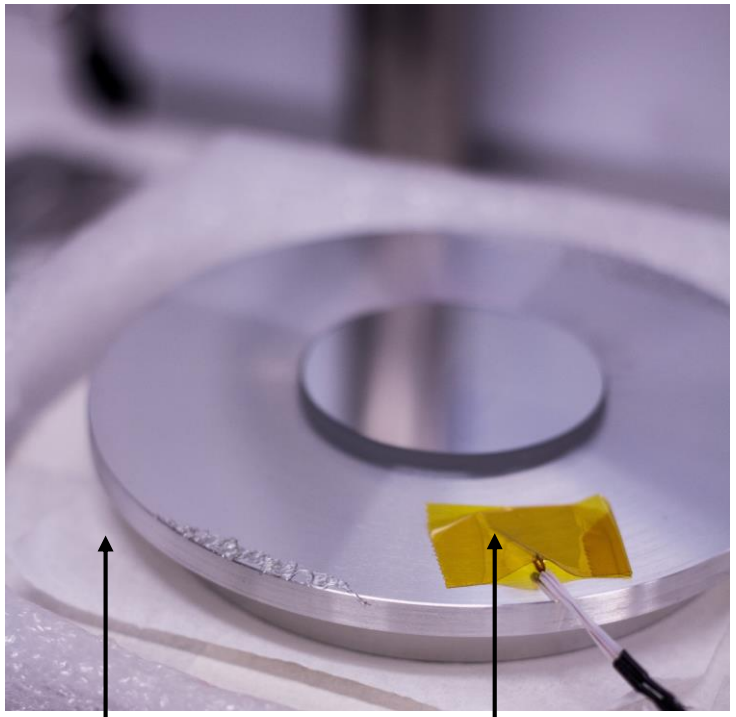

Hot plate

Thermistor

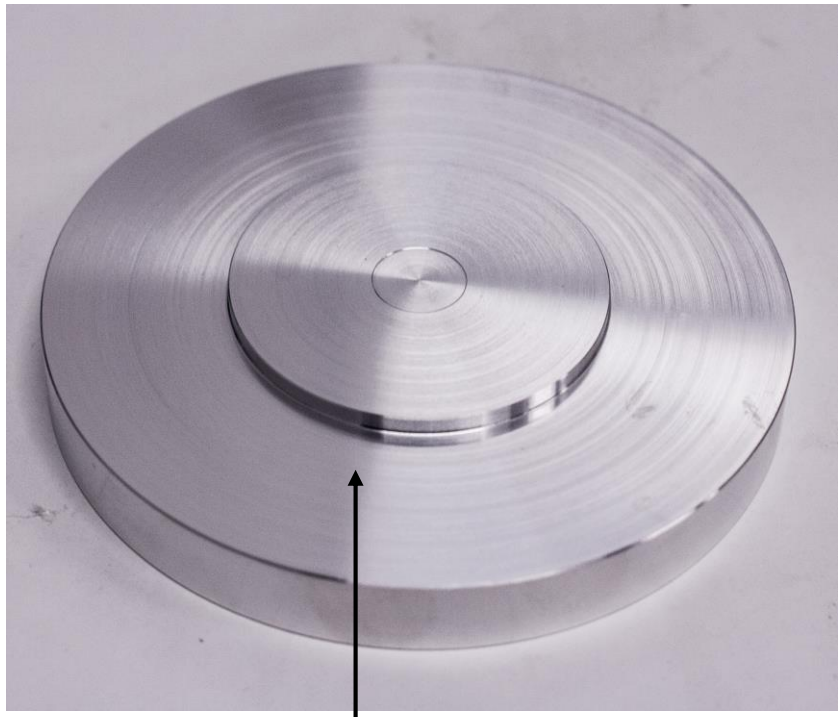

Setting ring

- Actuating ring was placed on setting ring on a hot plate
- Mirror dropped into actuating ring once heated up sufficiently
- Interference is tight → challenging to drop optics, required higher temperature (thermistor recorded 132°C)

1. Mirror cracked!

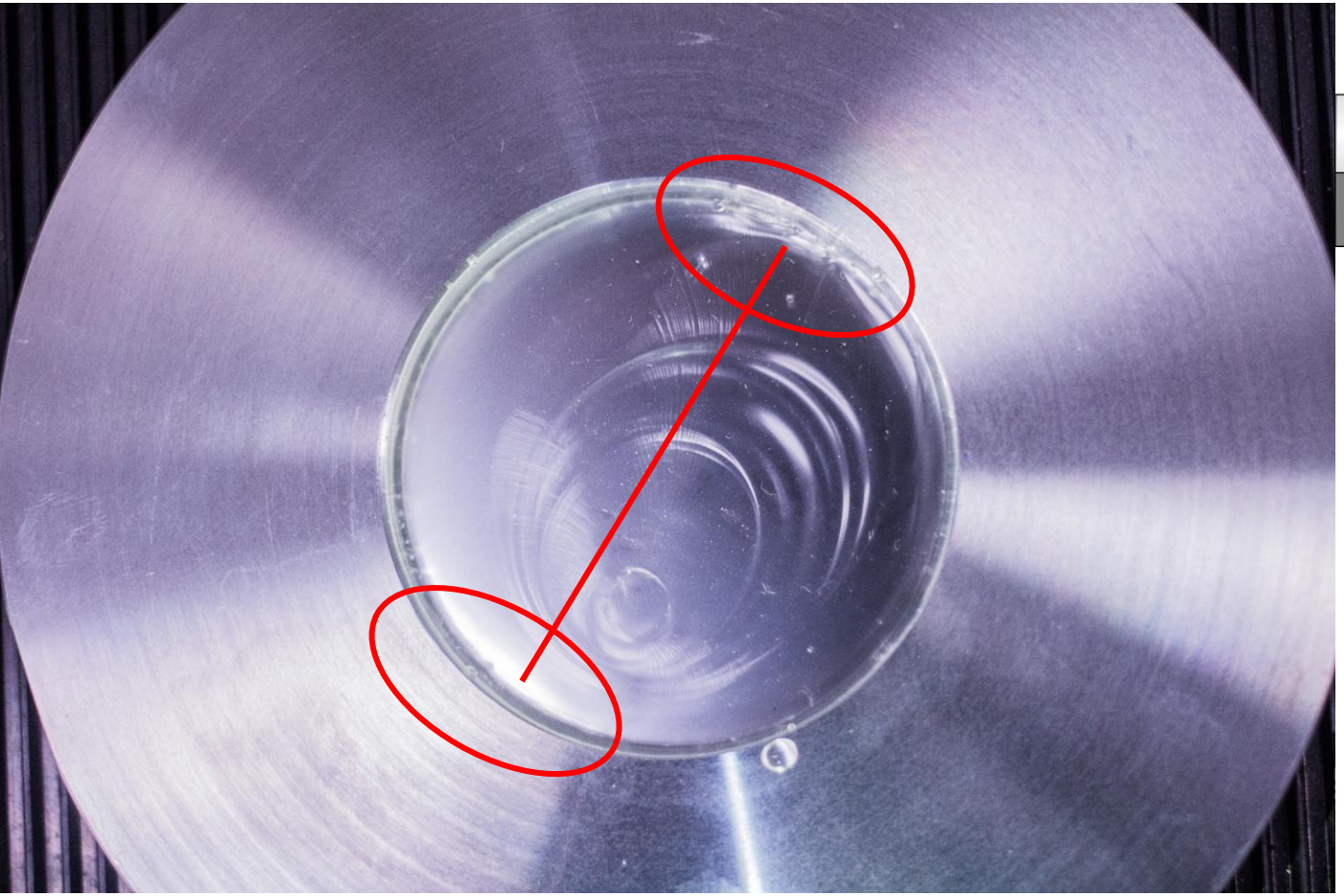

What happened?

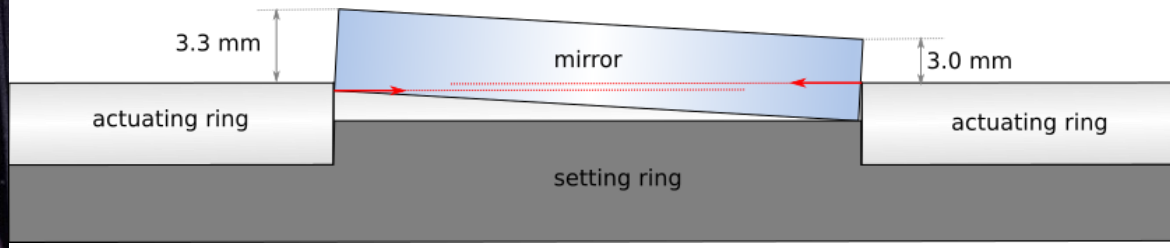

- Unfortunately, the mirror cracked during cooling process.
- Suspected culprit: shear stress
- Measured height of optics from ring showed a difference of 0.3 mm between lowest and highest points
- Dropped down evenly → mainly compressive
- Angle → shear stress. Shear strength << compressive strength → Cracked mirror

➔ Angle tolerance?

1. What differs from previous assembly?

Current method of assembly

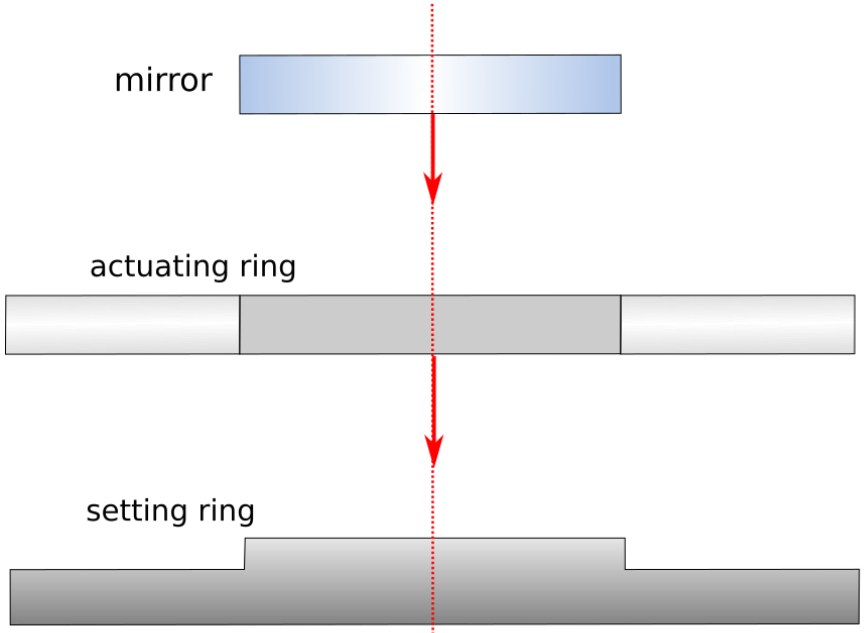

Previous method of assembly

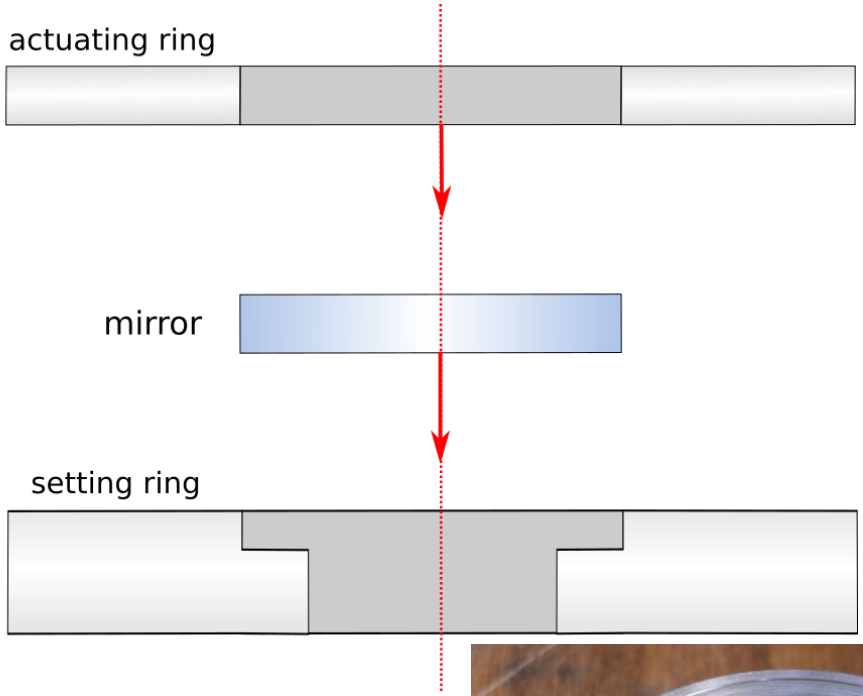

- Previously, mirror sat inside setting ring “pocket“
- Actuating ring is dropped onto optics once sufficiently heated (easier to handle compared to dropping optics to ring)
- Relief on upper surface to assist with better flatness monitoring around the edge.
- Smaller interference then theoretically computed → easier to perform shrink fit



1. Current plan

- Make new ring setters, reverting back to previous design
- Reduce interference *dz* from 40µm to 35 µm
- Using new oven to apply heat evenly
- Current setting up static deformation measurement with Hartmann sensor

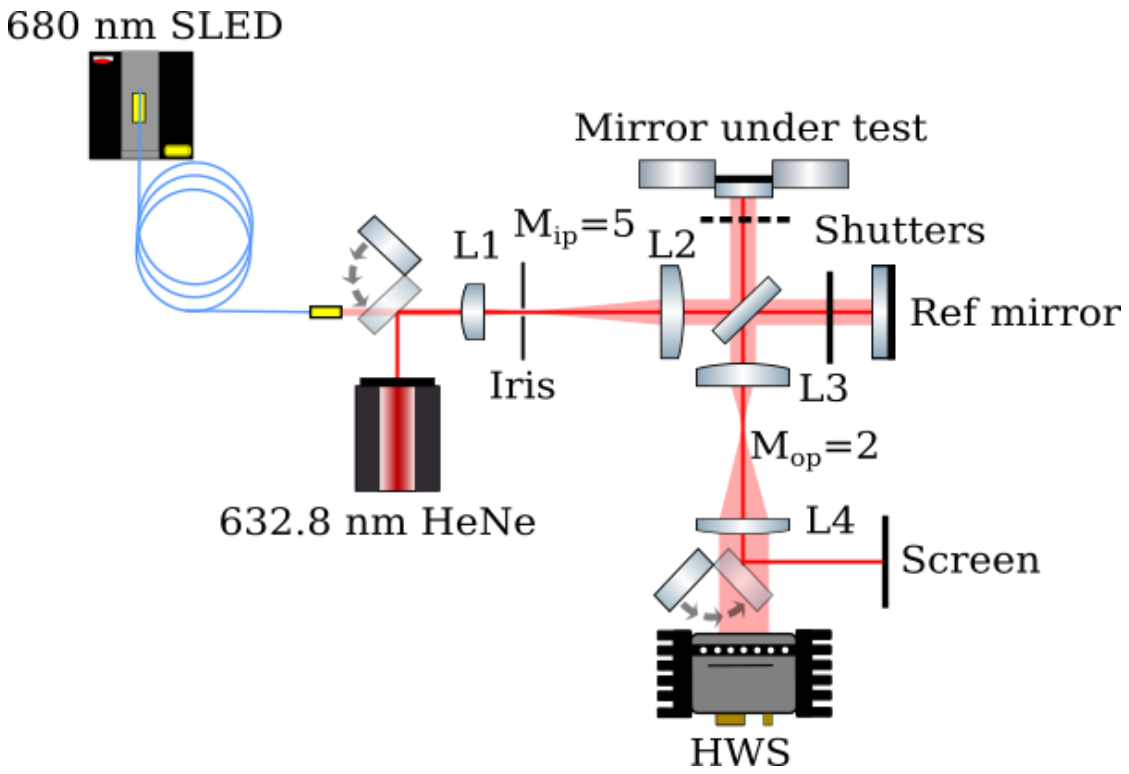

1. Mirror deformation in flexure holder

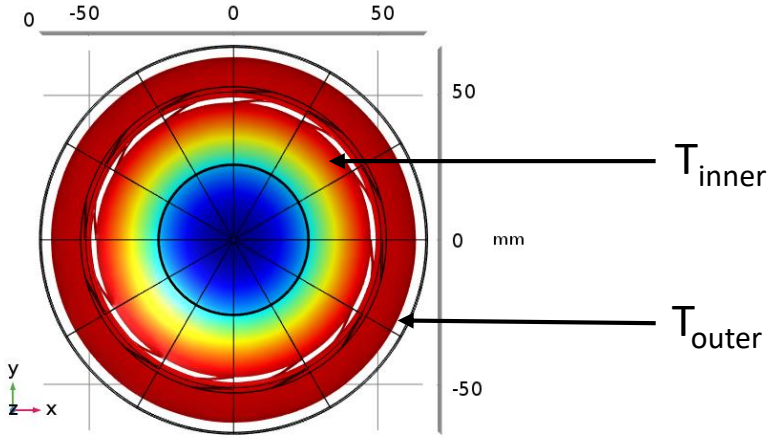

- FEA simulation of heating CFM mirror (0.5W here) show:
  - Deformation follows temperature change of inner ring
  - Outer ring is lower in temperature compared to inner ring

  → Can further optimize geometry to help "localize" heat within central ring

