Thermal CFM geometric parameter optimization:

1. Optimisation of offset ring design for maximum spherical power (S)
2. Eigenmode frequency of vibrational mode analysis at thermal equilibrium
3.Preliminary investigation of bracket's effects on deformation, eigenmode frequencies

SAMS meeting (2019/03/14)

LIGO-E1900073

Huy Tuong Cao, Sebastian Ng

1. Offset flat-ring CFM optimization

- Degrees of freedom:
  1. OD
  2. Ring thickness (*t*)
  3. Ring offset (*dz*)

  → Max *S* achievable?

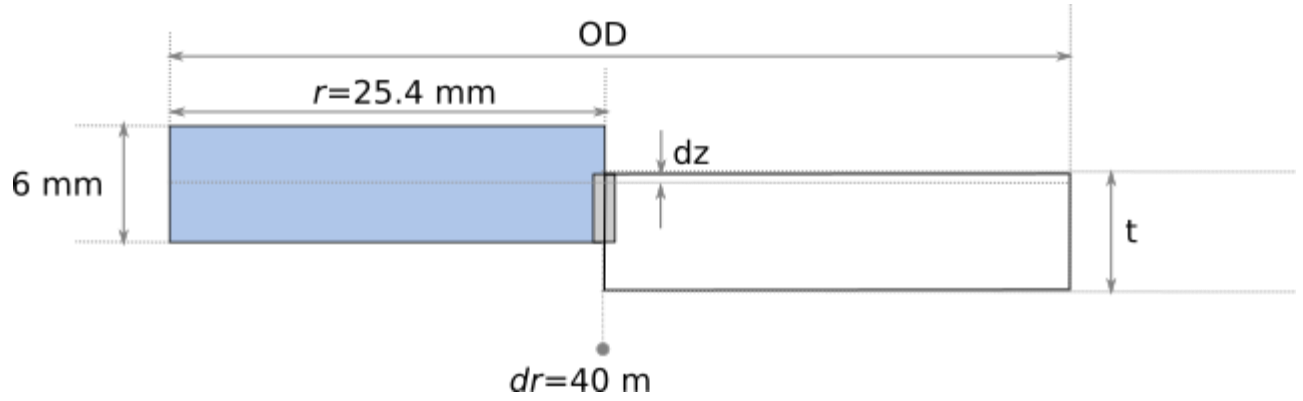

S vs OD

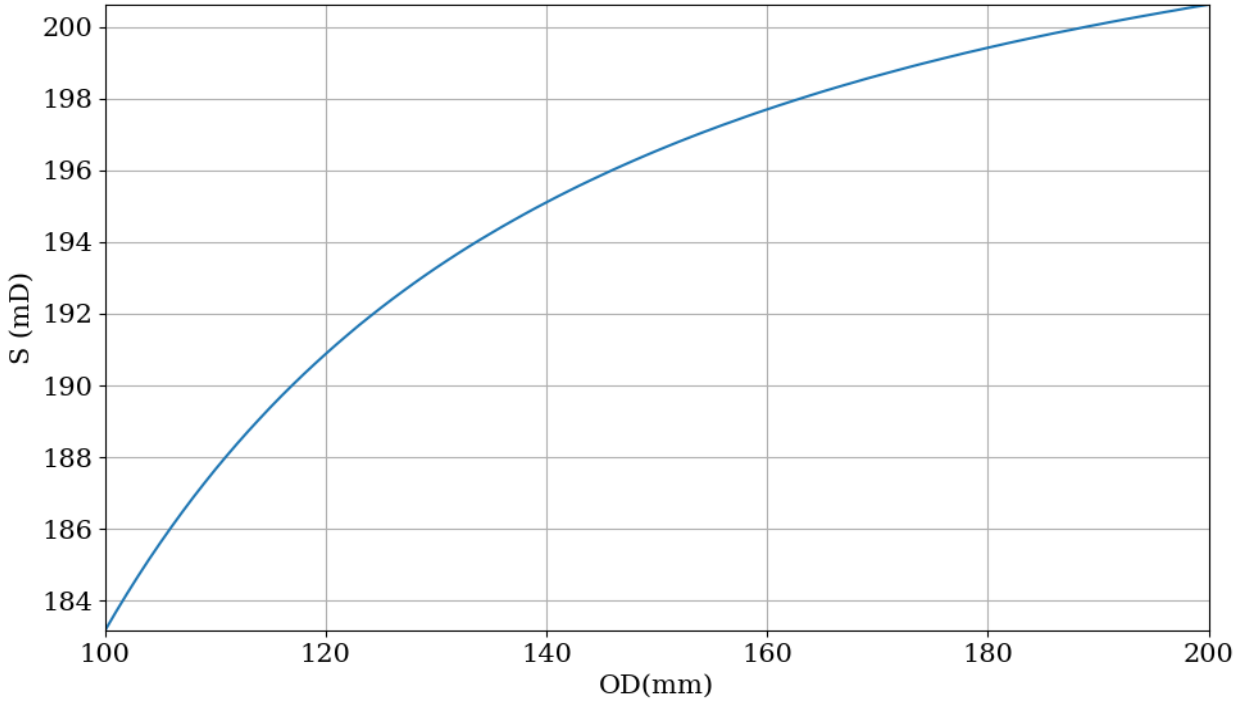

- Max S achievable increases with increasing diameter due to lower stiffness
- 183 mD @ 100 mm OD → 201 mD @200 mm OD
- Limited by suspension footprint + resonance frequency

Ring thickness and offset effect of max S

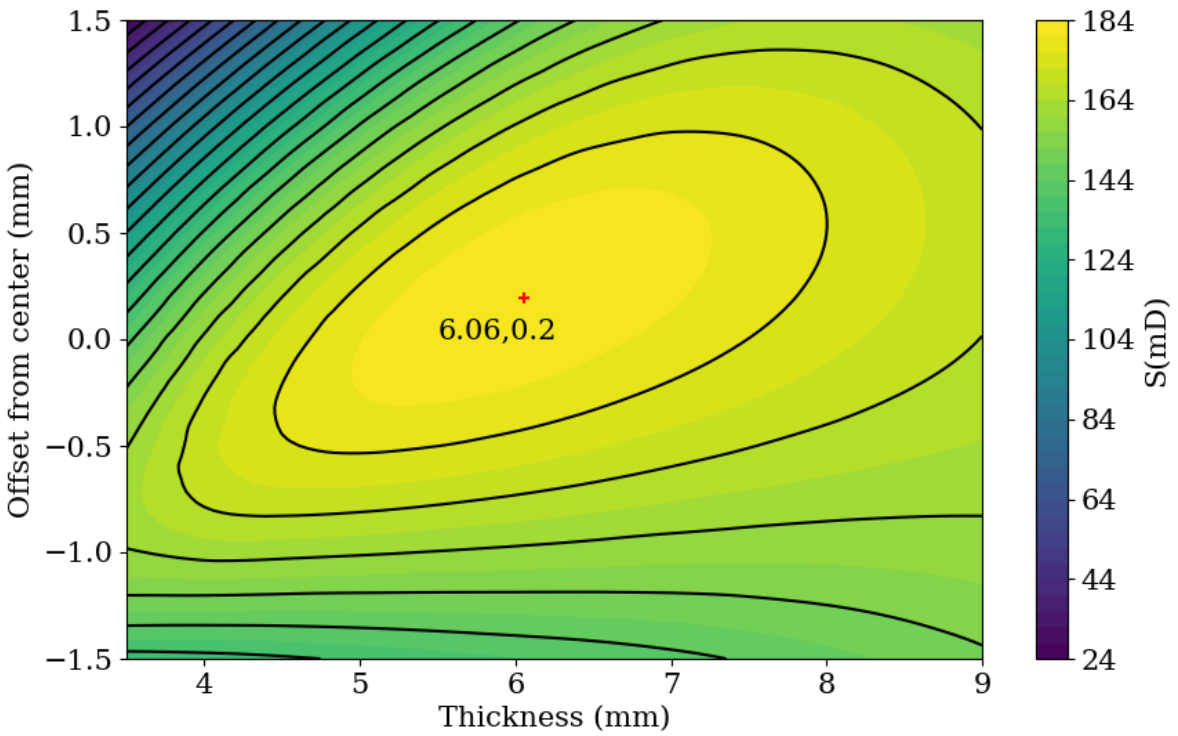

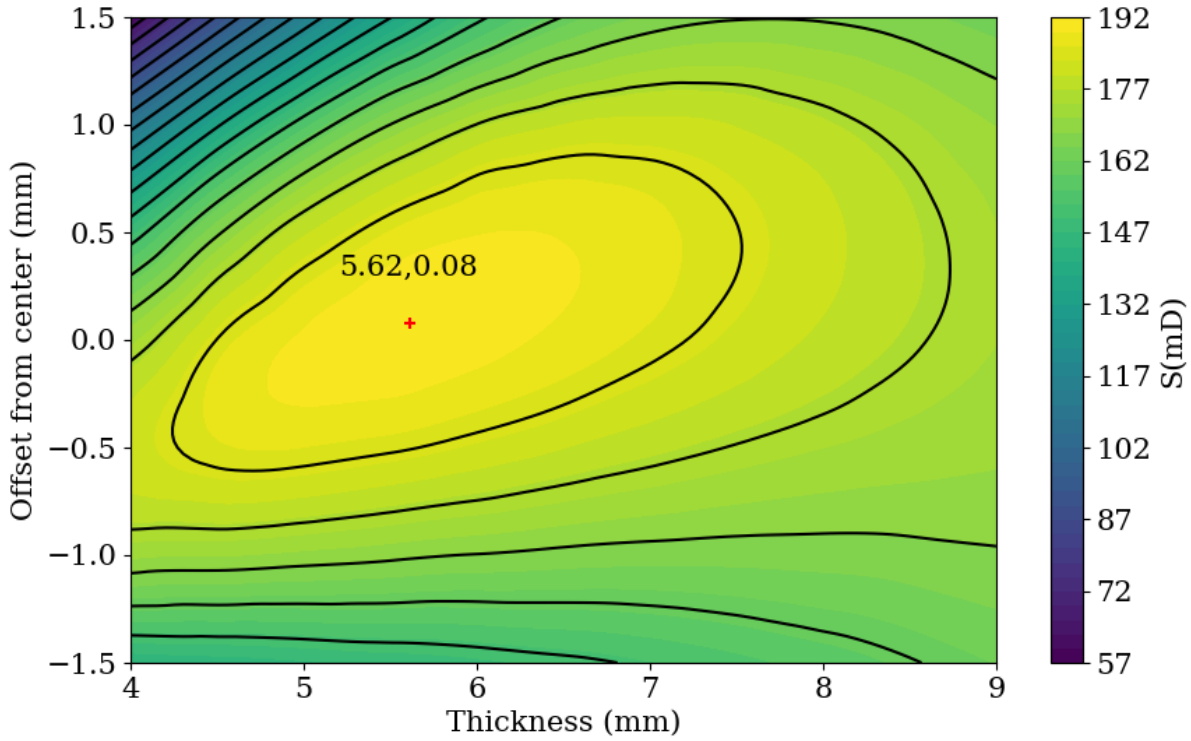

OD = 100 mm	OD = 120 mm
• Max S = 183 mD @ t = 6.1 mm, dz = 0.2 mm	• Max S = 192 mD @ t = 5.6 mm, dz = 0.1 mm

Stress consideration

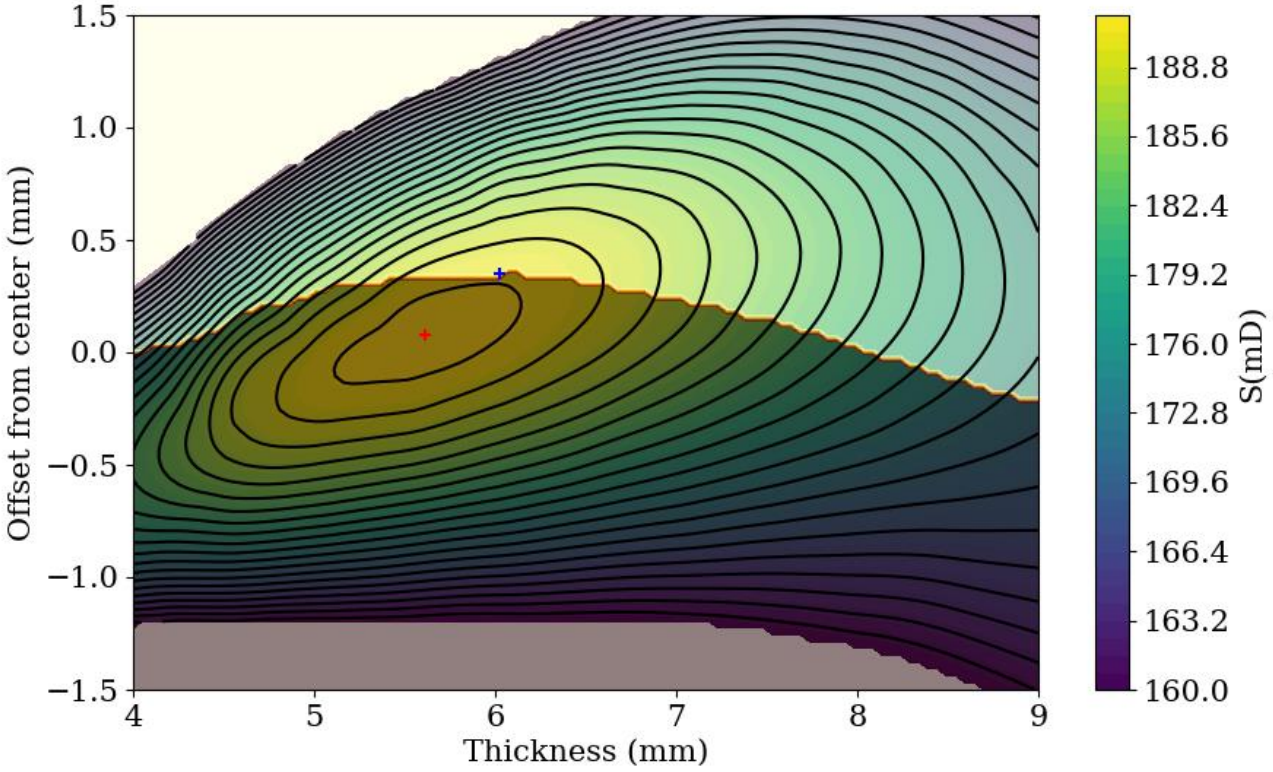

OD = 120 mm
Max S = 192 mD @ t = 5.6 mm, dz = 0.1 mm After adjusting for stress constraint: Max S = 190 mD @ t = 6.1 mm, dz = 0.2 mm

- Recall figure of merit S/T_{max} = 8.9 mD/MPa , for ΔS_{min} = 150 mD and T_{max} = 17 Mpa
- White-out region: spherical power range does not meet requirement of 150 mD
- Dark shaded region: S/T_{max} ratio is below requirement

→ Move across the contour to find the maximum that satisfies stress requirement

Vibrational mode frequency consideration

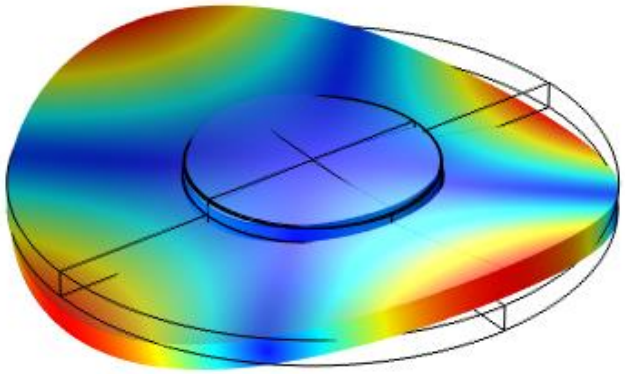

Mode 1

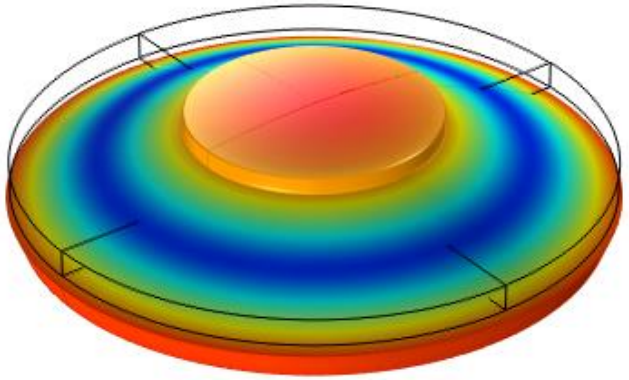

Mode 2

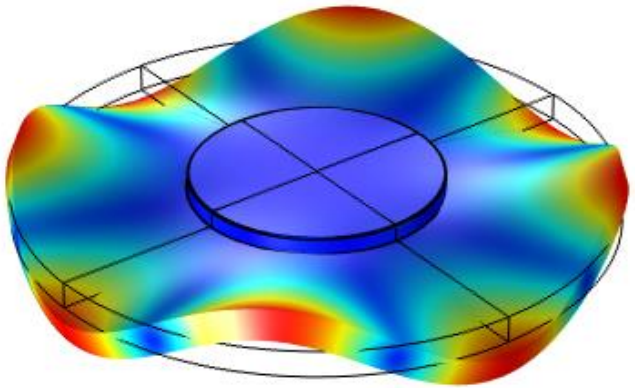

Mode 3

OD = 120 mm
Mode 1: 2178 Hz Mode 2: 3623 Hz Mode 3: 7992 Hz

- Increasing OD and reduce thickness (to optimize for S) effectively reduces CFM's stiffness → lowering vibrational eigenmode frequencies
- For OD = 100 mm, resonance frequencies approximately x3 higher than for OD = 120 mm

Optimal flat mirror geometry for CFM

- 50.8 mm diameter mirror, 6 mm thickness, 120 mm OD
- Actuating ring thickness varies between 5.6 and 6.1 mm depending on stress constraint
- Max actuating range of 192 mD
- Increase OD → lower resonance frequency, may not be compatible with suspension footprint
- Increase thickness → Reduce max actuation range

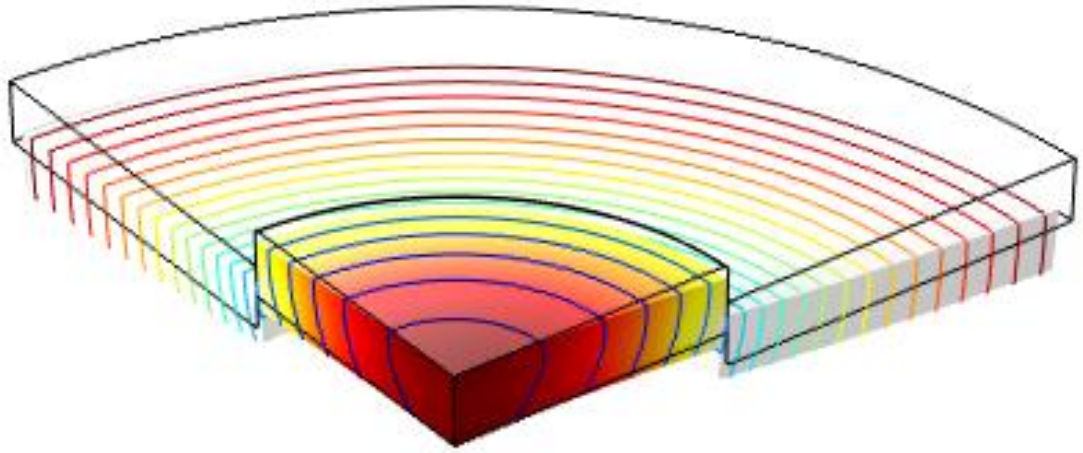

Can we do better? – Planoconcave mirror

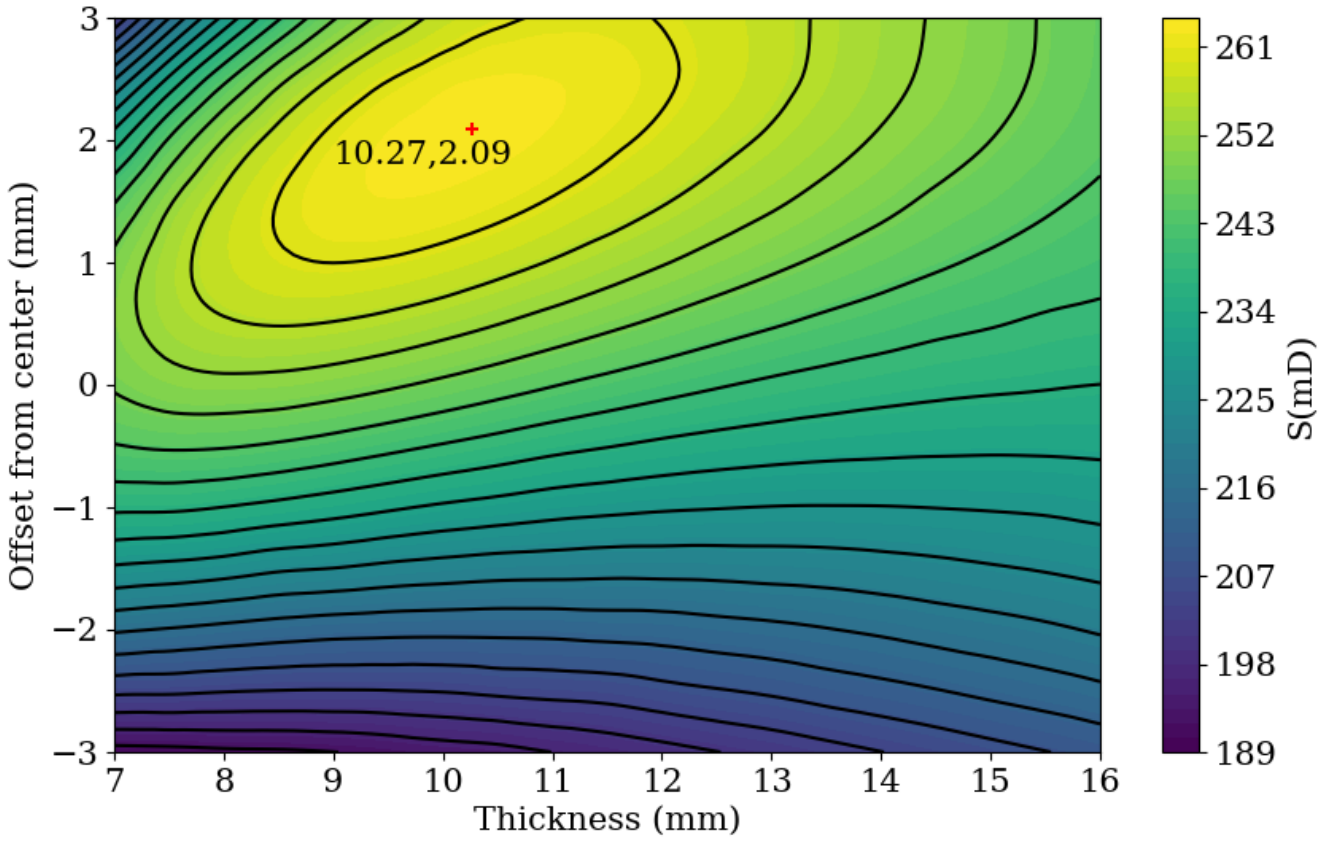

- Max S achievable: 262 mD
- At max S, S/T_{max} = 7.2 < 8.9 mD/MPa
- → move across contour to S approx. 250 mD to achieve required stress

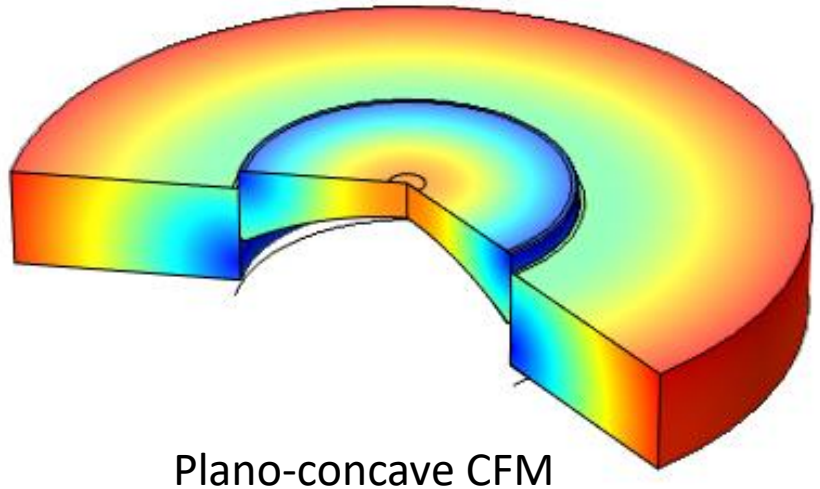

Plano-concave CFM

Edge thickness	12 mm
Central thickness	6 mm
R	52.5 mm
OD	120 mm
t	10.3 mm
dz	2.1 mm

2. Planoconcave CFM eigenmodes ?

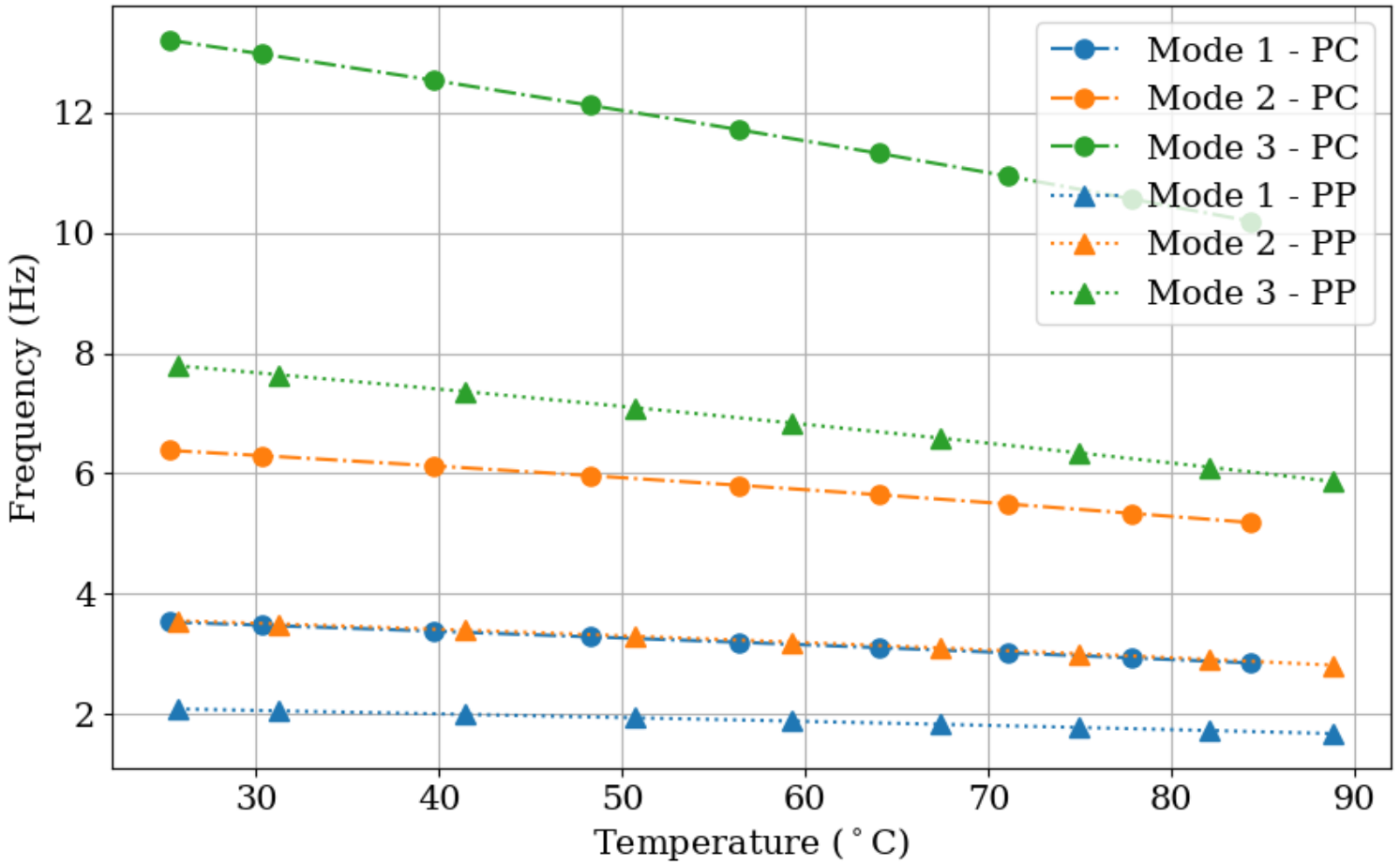

COMSOL FEA modelling:

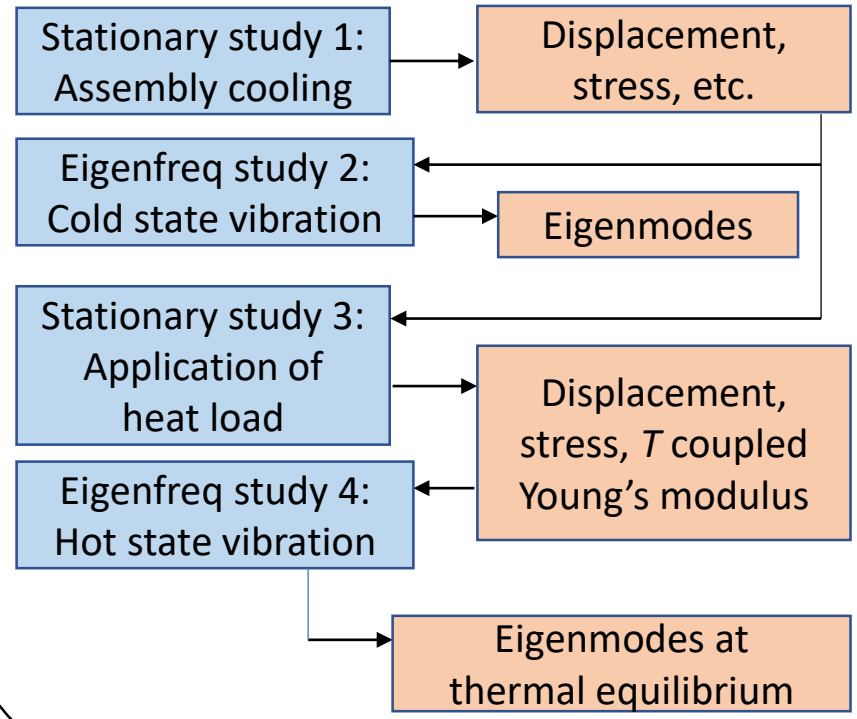

- Frequency of the first eigenmode (saddle mode) increases from 2kHz to 3.6 kHz.
- Eigenfrequencies decrease linear with increasing temperature due to heating of mirror

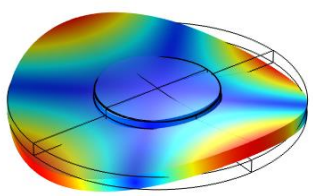

Mode 1

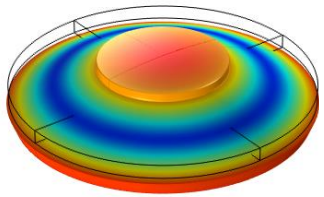

Mode 2

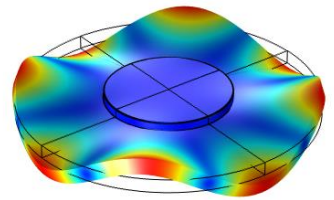

Mode 3

3. Effects of introducing bracket for holding optics

- Test bracket: single through hole with a single thread
  - minimizes contact with disc
  - allows increasing thread length to reduce heat conduction
  - Allow added mass on bracket to meet mass requirement
- Bracket made from stainless steel.
- Thread made from:
  - Aluminium → stress concentration between interface with bracket
  - Stainless stell → stress concentration within disc
- Wire suspended from bracket → no hard boundary condition, allowing brackets to deform freely
- **Question**:

1. How does bracket affect mirror deformation?
2. Effects of added bracket on vibrational eigenmode frequencies.

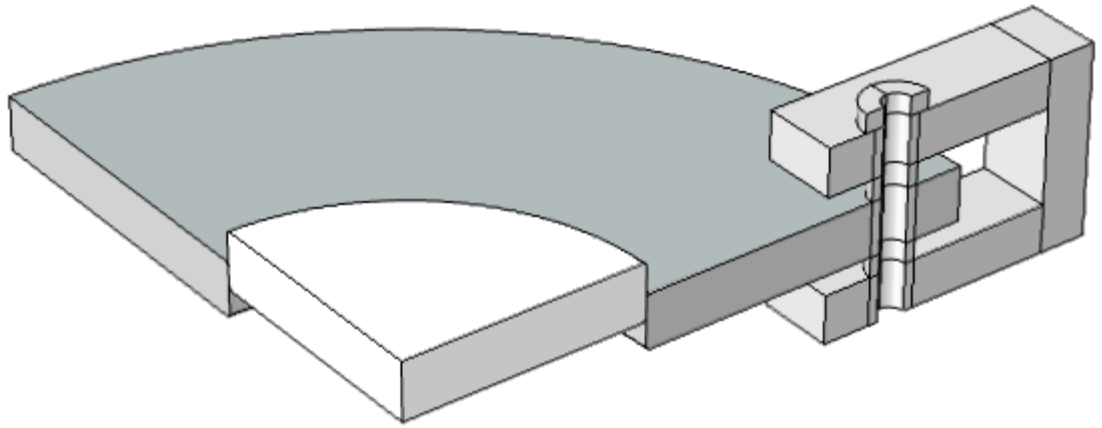

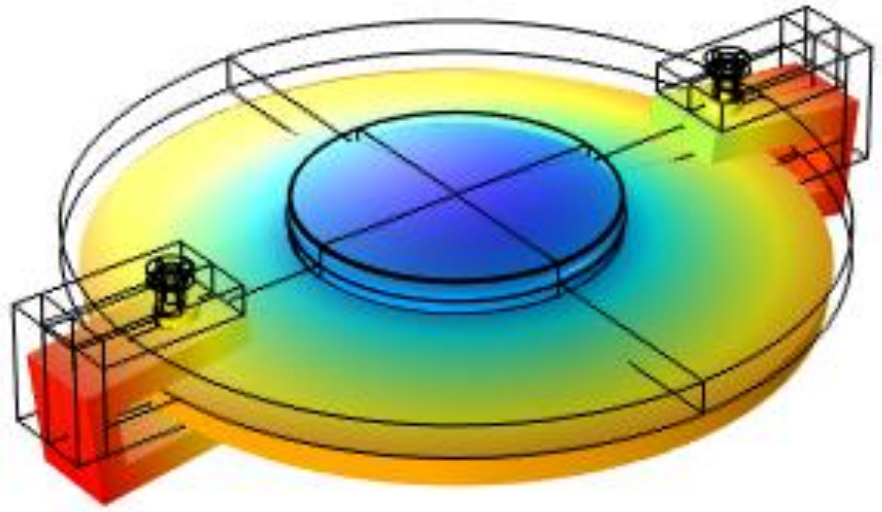

Effects on mirror deformation

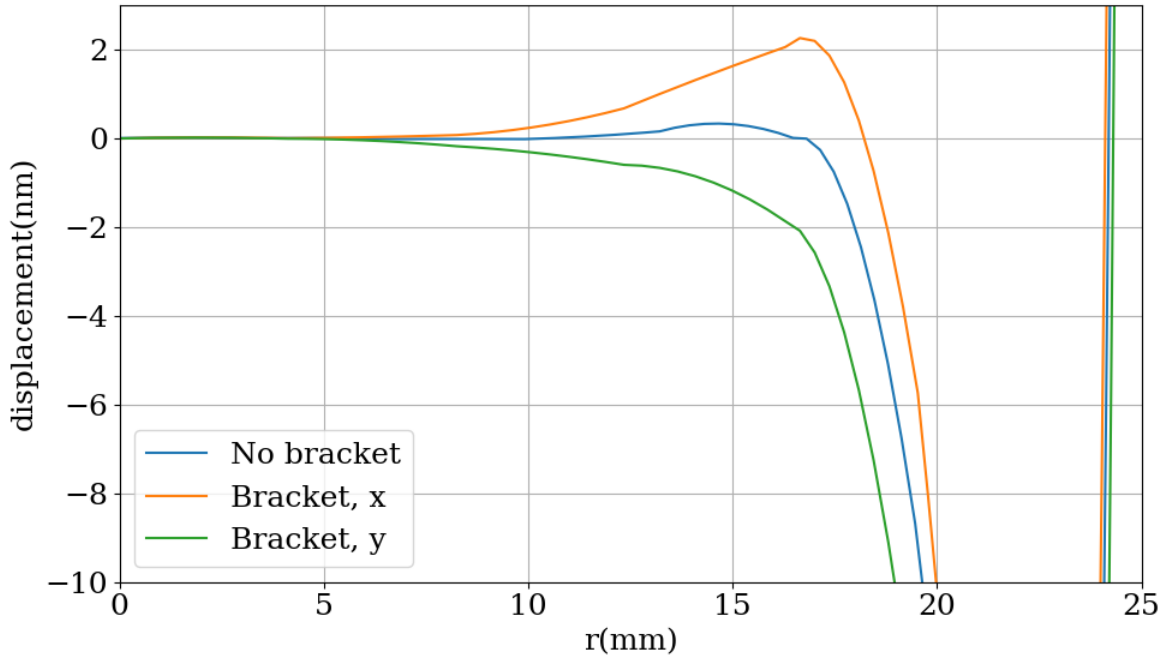

Figure 1: Mirror surface higher order aberration shows small difference

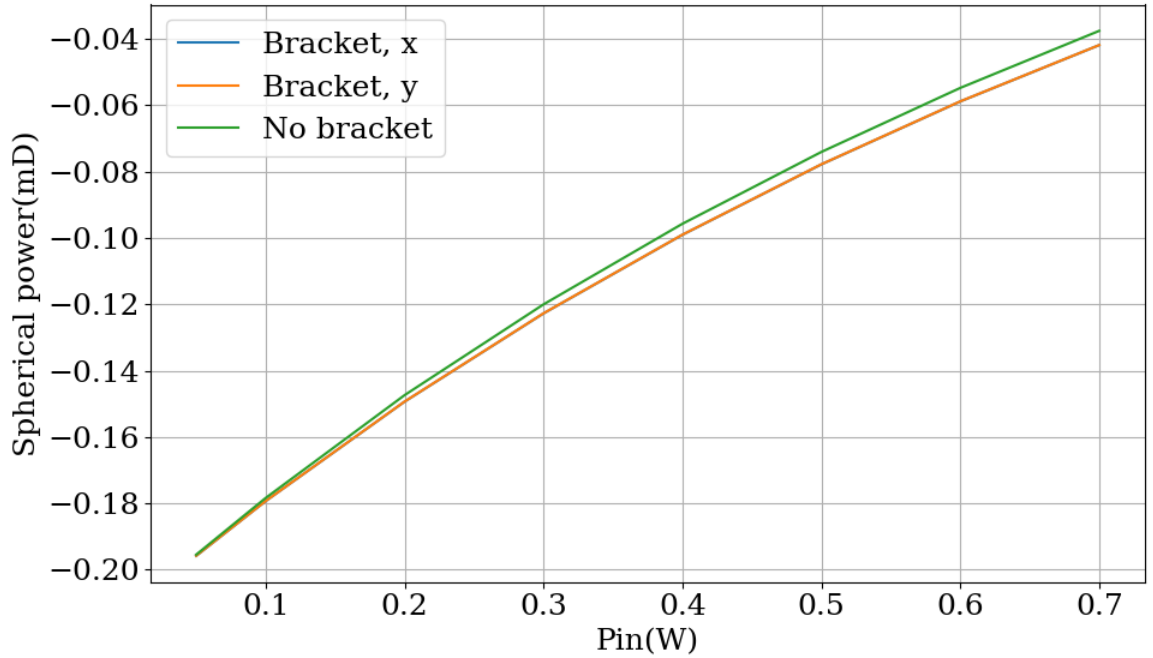

Figure 2: Spherical power approximated from second order polynomial coefficient of the fir. Negative S indicates convex surface

- Similar quadratic deformation in both x and y → No apparent astigmatism
- Small difference in higher order aberration compared to no brackets case at c.a. 10 mm from centre
- Required slightly more input power achieve same actuation range

Effects on mirror eigenmode frequencies

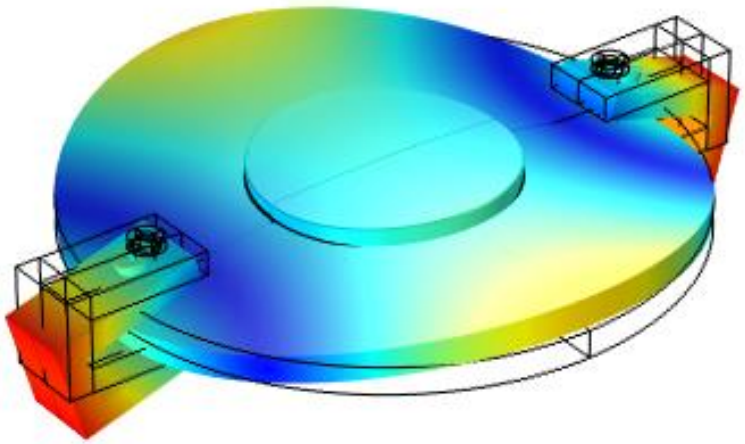

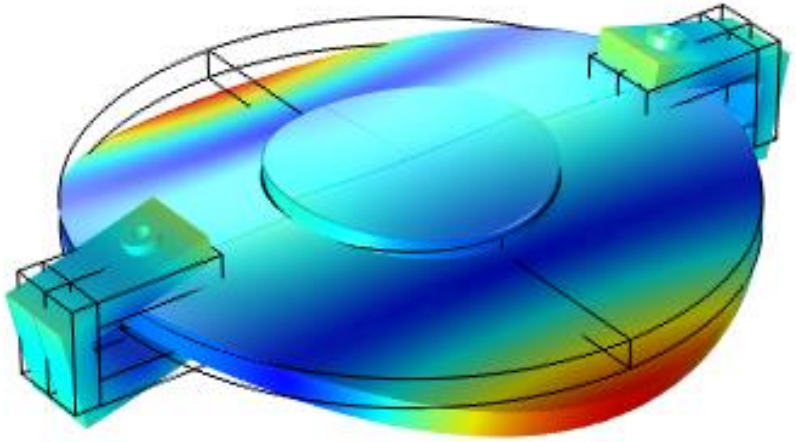

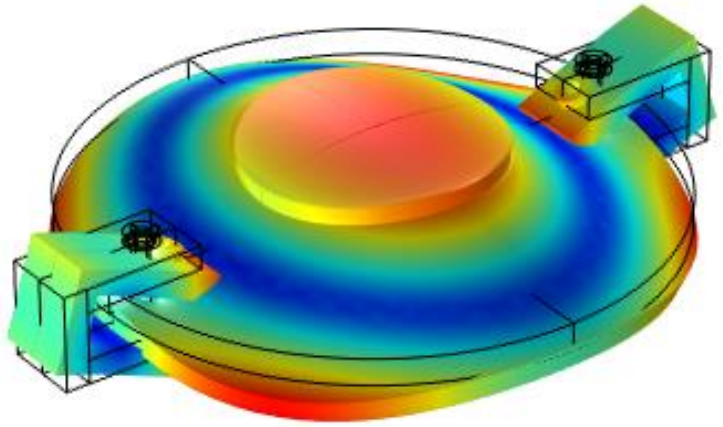

Mode 1: Saddle X	Mode 2: Saddle Y	Mode 3: Astigmatic drumhead
• f = 1041 Hz @ cold state • Reduces to 796 Hz at 87°C	• f = 2748 Hz @ cold state • Reduces to 2176 Hz Hz at 87°C	• f = 4357 Hz @ cold state • Reduces to 3526 Hz at 87°C

- Added mass along x-axis breaks degeneracy of x-saddle modes
- Lower eigenfrequencies significantly as expected from previous corresponding with Minkyun

How about plano-concave mirror?

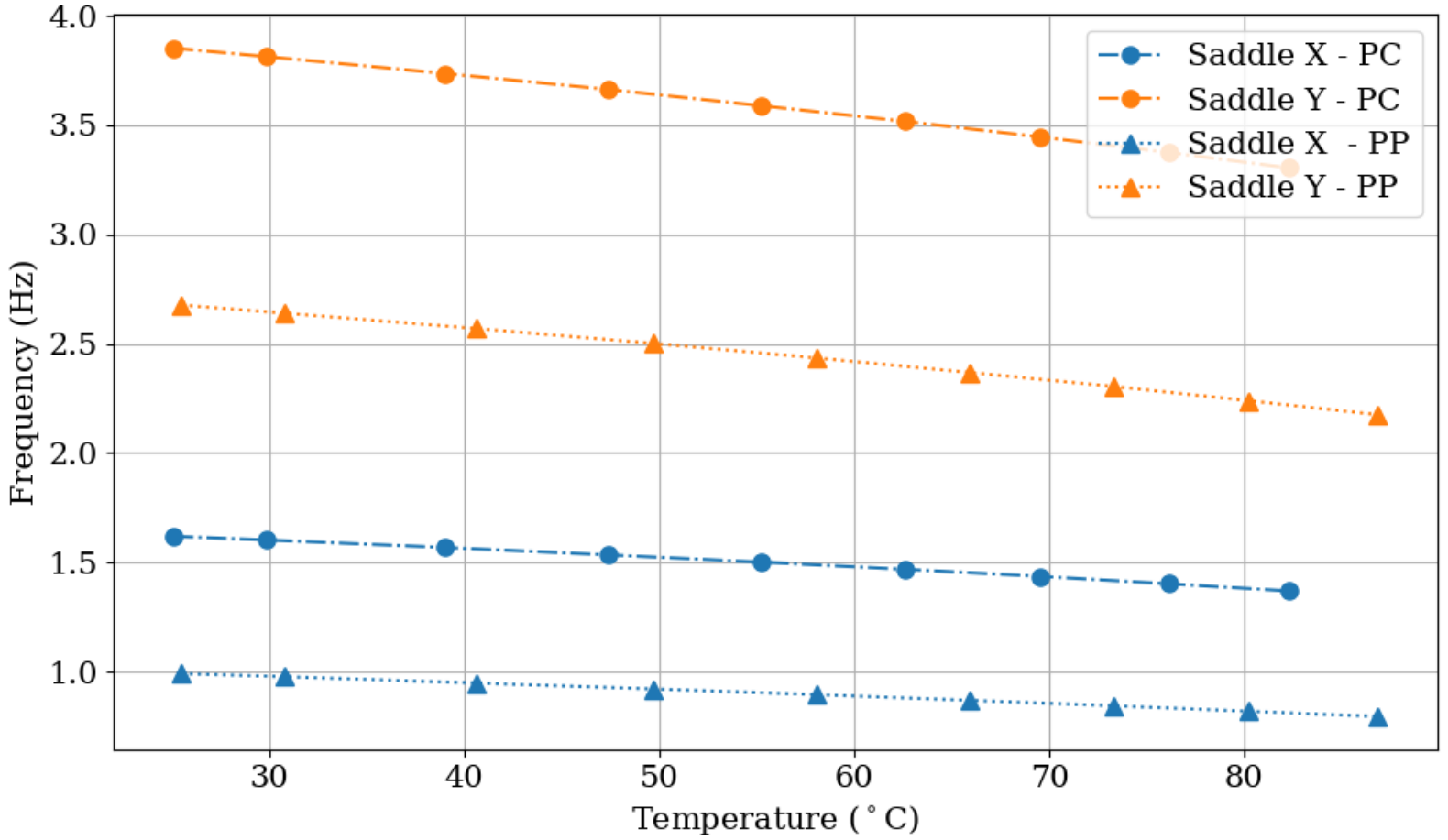

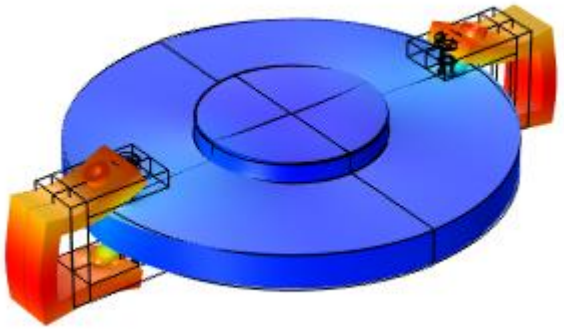

- Due greater thickness of the disc used in CPM CFM, we simulate with longer thread (30 mm instead of 20 mm) → reduce stiffness of the bracket → bracket vibration becomes third mode (instead of drumhead mode)

- Similarly, PCM results in consistently higher frequencies of vibrational modes
- The bracket also lowers the frequency of the saddle mode in PCM CFM
- With tuning of bracket , once can push the resonance frequency beyond 1kHz region

Summary

- **Optimal flat mirror geometry:**
  - 6 mm thick, 50.8 diameter
  - 120 mm OD, 5.6 – 6.1 mm thick, 0.1 – 0.2 mm offset from centre
  - 192 mD for max S, reduced to 190 mD to accommodate tensile stress requirement (17 MPa)
  - 2.2 kHz first vibration mode
- **Plano concave mirror geometry**
  - 6 mm central, 12 mm edge
  - 120 mm OD, 10.2 mm thick, 2 mm offset from centre
  - Increase overall mass of optics
  - 260 mD for max S, reduced to 250 mD to accommodate tensile stress requirement
  - 3.6 kHz first vibration mode
  - → If surface figure meets requirements, planoconcave mirror provides superior performance
- **Effects of brackets:**
  - No strong asymmetric effect on mirror deformation
  - Only reduces actuation range lightly
  - Lower eigenmode frequency significantly
  - Brackets can still freely deform → coupling into suspension??