REV.	DATE	DCN #	DRAWING TREE #
v1	5 SEP 2018	-	-
v14	28 JUL 2021	-	-
v15	23 FEB 2024	E2400033-x0	-

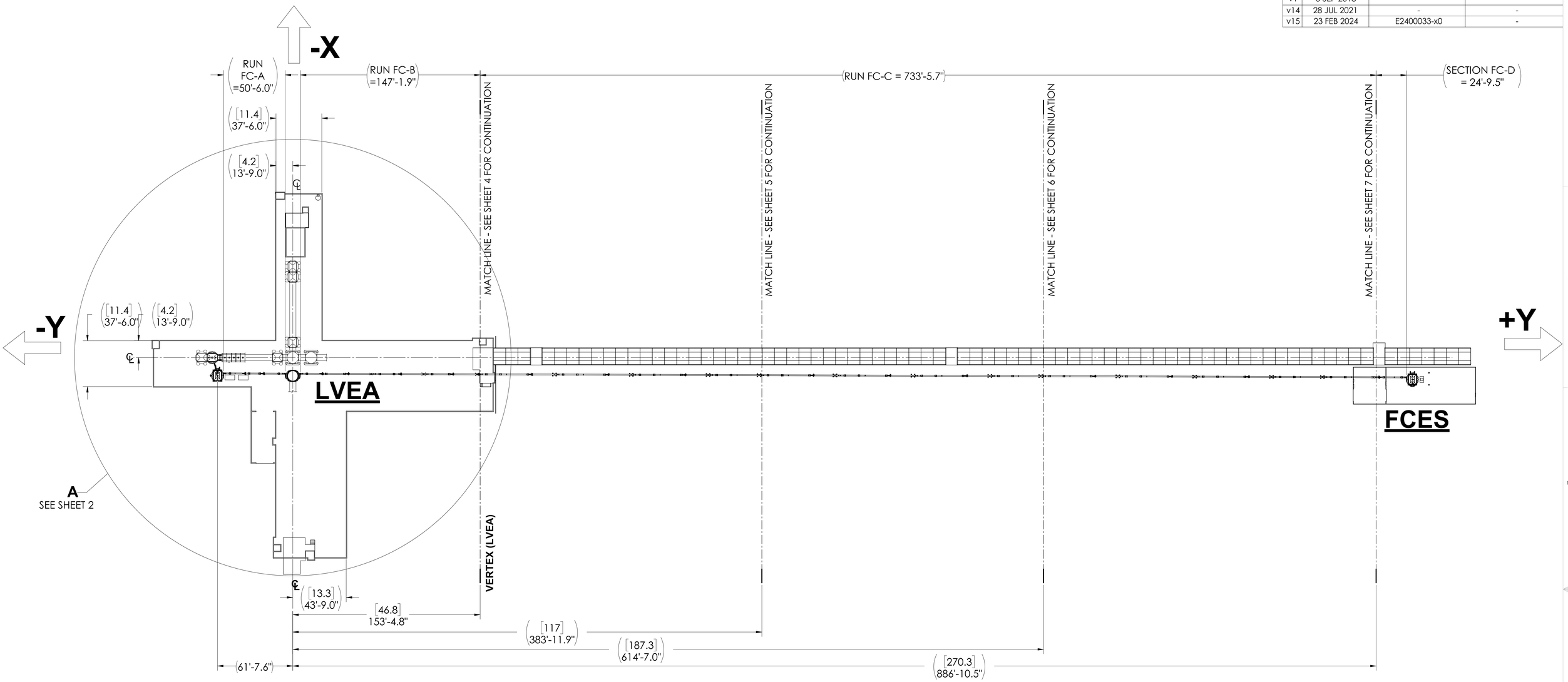

PLAN VIEW

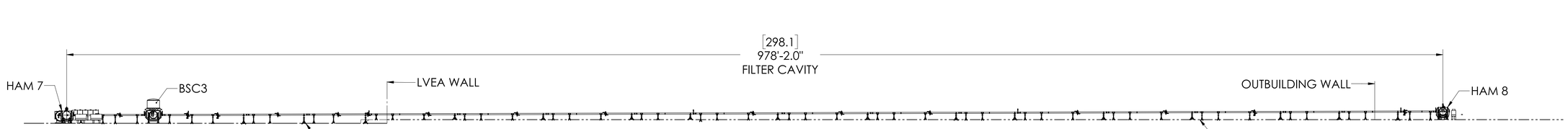

ELEVATION VIEW

(LVEA BUILDING, BTEs, AND OUTBUILDING, NOT SHOWN FOR CLARITY)

NOTES AND TOLERANCES: (UNLESS OTHERWISE SPECIFIED)

DIMENSIONS ARE IN INCHES [MM]

1. INTERPRET DRAWING PER ASME Y14.5-1994.

MATERIAL: N/A

FINISH: N/A µinch

LIGO CALIFORNIA INSTITUTE OF TECHNOLOGY MASSACHUSETTS INSTITUTE OF TECHNOLOGY

SYSTEM: ADVANCED LIGO

SUB-SYSTEM: VE

NEXT ASSY: D0901466

PART NAME: A+, Vacuum Equipment, L1, 300m FC.

DESIGNER	C.ROMEL	-	SIZE: E	DWG. NO. D1800238
DRAFTER	E.SANCHEZ	5 SEP 2015		REV. v15
CHECKER	SEE DCC	SEE DCC		
APPROVAL	SEE DCC	SEE DCC	SCALE: 1:360	PROJECTION: SHEET 1 OF 9

PART PDM VERSION: v-147
DWG PDM VERSION: v-038
D1800238-A+, Vacuum Equipment, L1, 300m FC

NOTES CONTINUED:

(2) HEIGHT OF INDICATED ITEMS ARE NOTIONAL AND SHALL BE PLACED AS REQUIRED TO FULFILL INSTALLATION, ALIGNMENT, AND ACCESS REQUIREMENTS.

(3) FOR SUPPORT STAND LOCATIONS AND REFERENCE DESIGNATIONS REFER TO LIGO D2000424

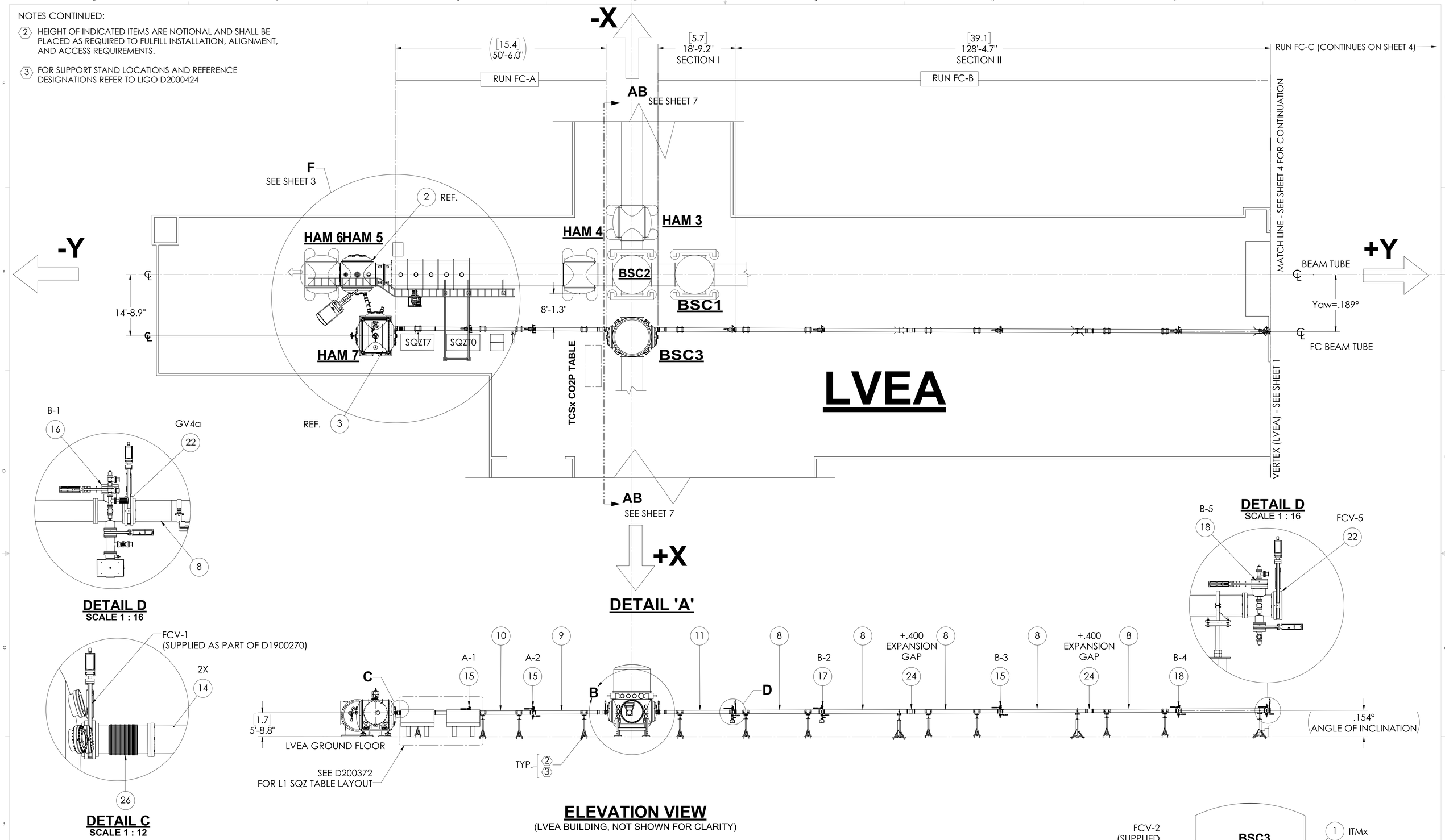

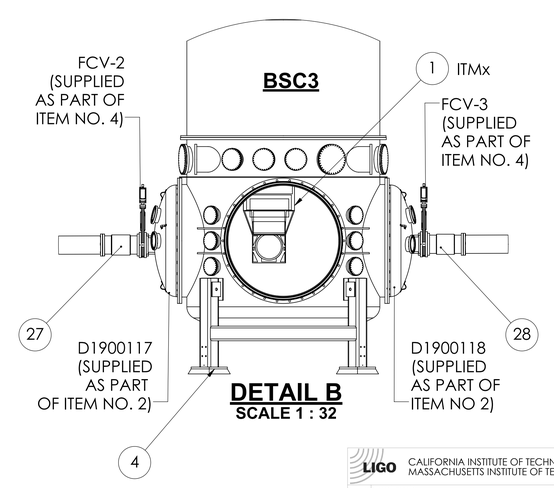

ITEM NO.	PART NUMBER	DESCRIPTION	MATERIAL	QTY.
16	D1900485-03	A+, VE, FC Tube, 6-WAY CROSS (TYPE 3)	304 SSTL	1
15	D1900485-02	A+, VE, FC Tube, 6-WAY CROSS (TYPE 2)	AISI 304	4
14	D1900443-07	A+, VE, FC FC BEAM TUBE, 10 IN. O.D, 12" CF, 12'-6" LG. (TYPE 07)	AISI 304	2
13	D1900443-06	A+, VE, FC FC BEAM TUBE, 10 IN. O.D, 12" CF, 8' LG. (TYPE 06)	AISI 304	1
12	D1900443-05	A+, VE, FC FC BEAM TUBE, 10 IN. O.D, 12" CF, 12' LG. (TYPE 05)	AISI 304	1
11	D1900443-04	A+, VE, FC FC BEAM TUBE, 10 IN. O.D, 12" CF, 15'-3.75" LG. (TYPE 04)	AISI 304	1
10	D1900443-03	A+, VE, FC FC BEAM TUBE, 10 IN. O.D, 12" CF, 14'-2.14" LG. (TYPE 03)	AISI 304	1
9	D1900443-02	A+, VE, FC FC BEAM TUBE, 10 IN. O.D, 12" CF, 15' LG. (TYPE 02)	AISI 304	1
8	D1900443-01	A+, VE, FC FC BEAM TUBE, 10 IN. O.D, 12" CF, 15' LG. (TYPE 01)	AISI 304	41
7	E2100135	SUPPORT TUBE LOCATIONS/KIT	N/A	AR
6	D2100534	A+, VAC., HAM5/7 Relay Tube Assy.	N/A	1
5	D1900311	A+ SYS HAM8-L1 Top Level Chamber Assembly	--	1
4	D0900493	AdvLIGO VE BSC3-L1, Vacuum Equipment Assembly	N/A	1
3	D1900274	A+ SYS HAM7-L1 Top Level Chamber Assembly	--	1
2	D0900457	AdvLIGO VE HAM5-L1, Vacuum Equipment Assembly	--	1
1	D0900495	AdvLIGO SUS BSC3-L1, XYZ Local CS for ITMX	--	1

PARTS LIST

ITEM NO.	PART NUMBER	DESCRIPTION	MATERIAL	QTY.
30	D1900424	A+, SLIC, FC TUBE BAFFLE ASSEMBLY	N/A	52
29	D2000337	A+, FC BEAMTUBE BELLOW, 20" LG. (NOMINAL, D1)	AISI 304	1
28		A+, FC BEAMTUBE BELLOW, 20" LG. (NOMINAL, B1)	AISI 304	1
27		A+, FC BEAMTUBE BELLOW, 20" LG. (NOMINAL, A2)	AISI 304	1
26		A+, FC BEAMTUBE BELLOW, 20" LG. (NOMINAL, A1)	AISI 304	1
25		A+, FC BEAMTUBE BELLOW, 20" LG. (NOMINAL)	AISI 304	4
24		A+, FC BEAMTUBE BELLOW, 20" LG. (EXTENDED 20.40)	AISI 304	12
23	D2000372	A+, SQZ, CORNER STATION INTERFACE LAYOUT (L1)	N/A	1
22	10848-UE01-0008 VAT OR EQ.	Series 108 | UHV gate valve. 10" ID	N/A	5
21	D1900485-08	A+, VE, FC Tube, 6-WAY CROSS (TYPE 8)	304 SSTL	1
20	D1900485-07	A+, VE, FC Tube, 6-WAY CROSS (TYPE 7)	AISI 304	1
19	D1900485-06	A+, VE, FC Tube, 6-WAY CROSS (TYPE 6)	304 SSTL	7
18	D1900485-05	A+, VE, FC Tube, 6-WAY CROSS (TYPE 5)	304 SSTL	2
17	D1900485-04	A+, VE, FC Tube, 6-WAY CROSS (TYPE 4)	AISI 304	1

PARTS LIST

LIGO CALIFORNIA INSTITUTE OF TECHNOLOGY MASSACHUSETTS INSTITUTE OF TECHNOLOGY

SIZE	DWG. NO.	REV.
E	D1800238	v15

SCALE: 1:96 PROJECTION: SHEET 2 OF 9

PART PDM VERSION: y-147
DWG PDM VERSION: y-038
D1800238 A+, Vacuum Equipment, L1, 300m FC

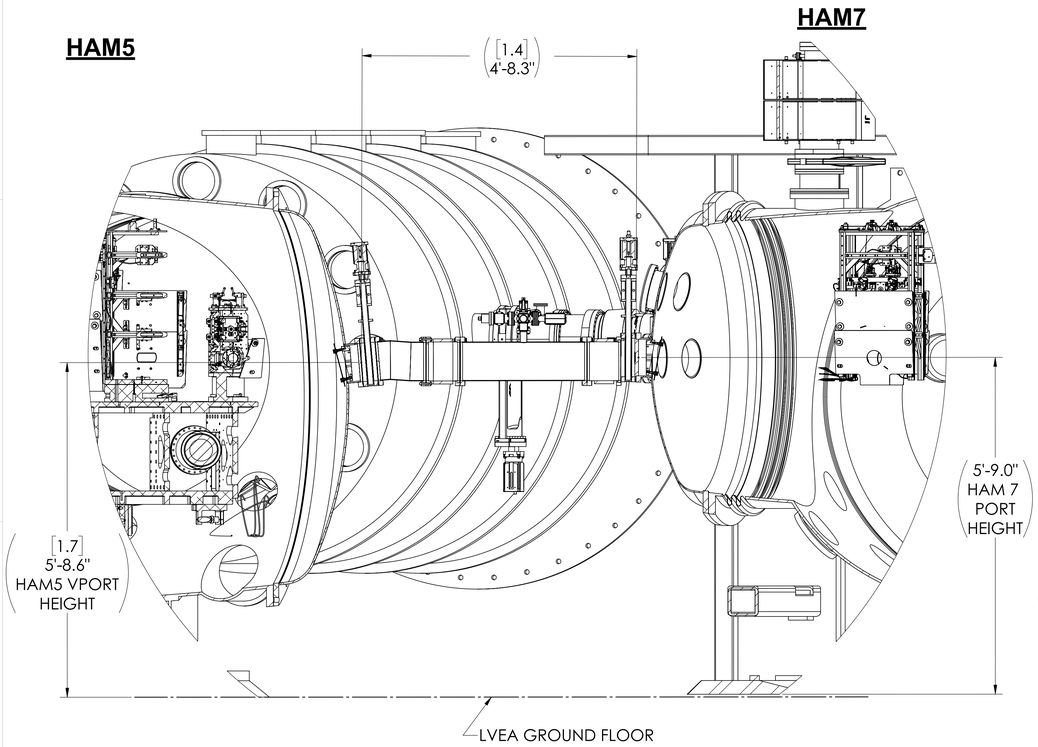

SECTION AJ-AJ
SCALE 1 : 16
(ROTATED 75° CCW FOR CLARITY)

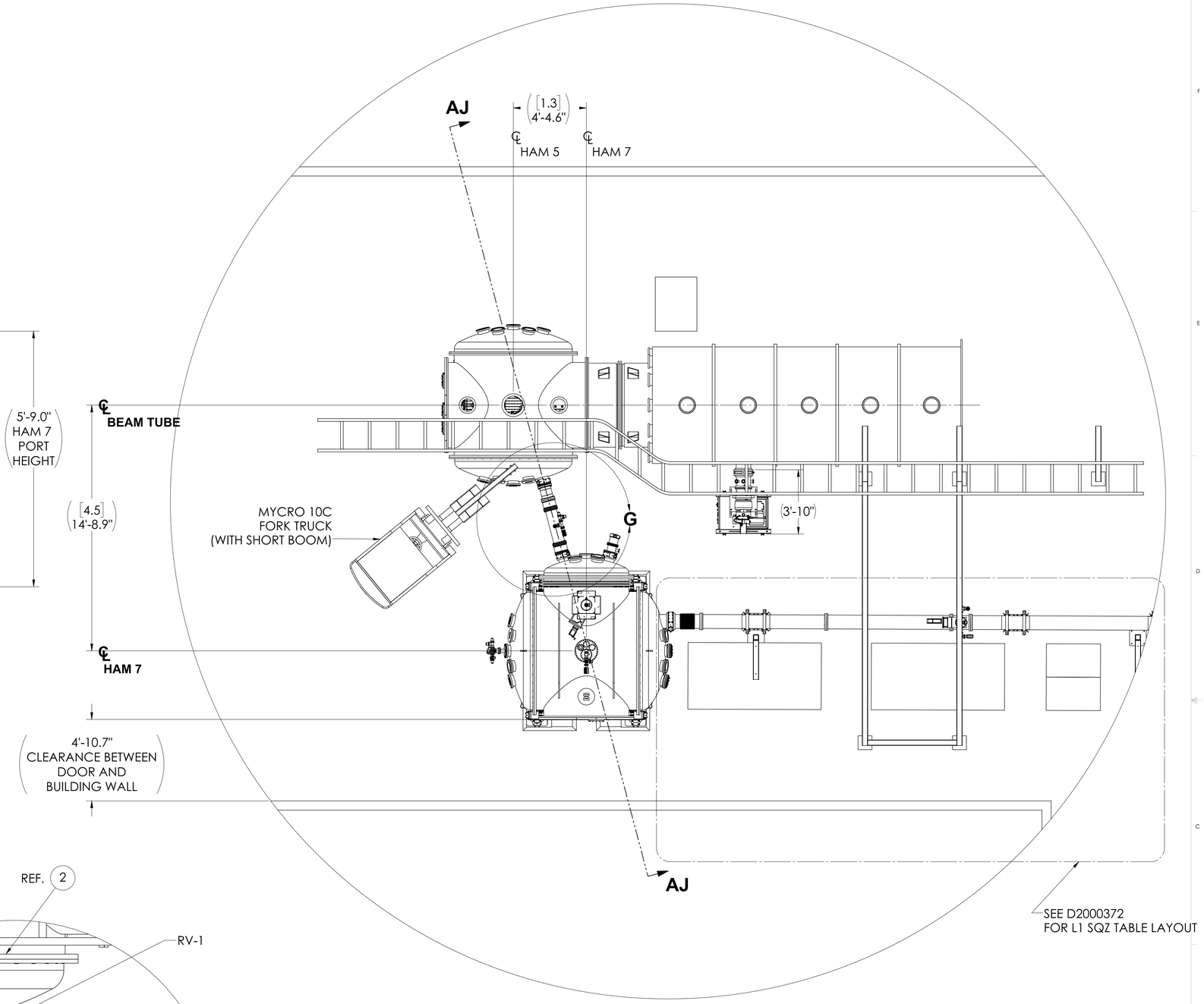

DETAIL F

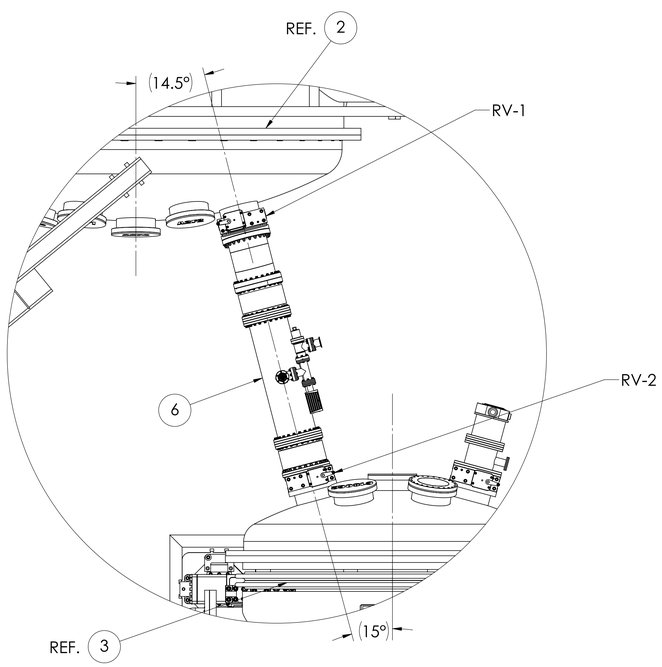

DETAIL G
SCALE 1 : 12

ITEM NO.	PART NUMBER	DESCRIPTION	MATERIAL	QTY.
30	D1900424	A+, SLIC, FC TUBE BAFFLE ASSEMBLY	N/A	52
29	D2000337	A+, FC BEAMTUBE BELLOW, 20" LG. (NOMINAL, D1)	AISI 304	1
28		A+, FC BEAMTUBE BELLOW, 20" LG. (NOMINAL, B1)	AISI 304	1
27		A+, FC BEAMTUBE BELLOW, 20" LG. (NOMINAL, A2)	AISI 304	1
26		A+, FC BEAMTUBE BELLOW, 20" LG. (NOMINAL, A1)	-	1
25		A+, FC BEAMTUBE BELLOW, 20" LG. (NOMINAL)	AISI 304	4
24		A+, FC BEAMTUBE BELLOW, 20" LG. (EXTENDED 20.40)	AISI 304	5
23	D2000372	A+, SQZ, CORNER STATION INTERFACE LAYOUT (L1)	N/A	1
22	10848-UE01-0008 VAT OR EQ.	Series 108 | UHV gate valve. 10" ID	-	5
21	D1900485-08	A+, VE, FC Tube, 6-WAY CROSS (TYPE 8)	304 SSTL	1
20	D1900485-07	A+, VE, FC Tube, 6-WAY CROSS (TYPE 7)	AISI 304	1
19	D1900485-06	A+, VE, FC Tube, 6-WAY CROSS (TYPE 6)	304 SSTL	7
18	D1900485-05	A+, VE, FC Tube, 6-WAY CROSS (TYPE 5)	304 SSTL	2
17	D1900485-04	A+, VE, FC Tube, 6-WAY CROSS (TYPE 4)	AISI 304	1
16	D1900485-03	A+, VE, FC Tube, 6-WAY CROSS (TYPE 3)	304 SSTL	1
15	D1900485-02	A+, VE, FC Tube, 6-WAY CROSS (TYPE 2)	AISI 304	4
14	D1900443-07	A+, VE, FC FC BEAM TUBE, 10 IN. O.D, 12" CF, 12'-6" LG. (TYPE 07)	AISI 304	2
13	D1900443-06	A+, VE, FC FC BEAM TUBE, 10 IN. O.D, 12" CF, 8' LG. (TYPE 06)	AISI 304	1
12	D1900443-05	A+, VE, FC FC BEAM TUBE, 10 IN. O.D, 12" CF, 12' LG. (TYPE 05)	-	1
11	D1900443-04	A+, VE, FC FC BEAM TUBE, 10 IN. O.D, 12" CF, 15'-3.75" LG. (TYPE 04)	AISI 304	1
10	D1900443-03	A+, VE, FC FC BEAM TUBE, 10 IN. O.D, 12" CF, 14'-2.14" LG. (TYPE 03)	AISI 304	1
9	D1900443-02	A+, VE, FC FC BEAM TUBE, 10 IN. O.D, 12" CF, 15' LG. (TYPE 0)	AISI 304	1
8	D1900443-01	A+, VE, FC FC BEAM TUBE, 10 IN. O.D, 12" CF, 15' LG. (TYPE 01)	AISI 304	41
7	E2100135	SUPPORT TUBE LOCATIONS/KIT	N/A	1
6	D2100534	A+, VAC., HAM5/7 Relay Tube Assy.	N/A	1
5	D1900311	A+ SYS HAM8-L1 Top Level Chamber Assembly	--	1
4	D0900493	AdvLIGO VE BSC3-L1, Vacuum Equipment Assembly	N/A	1
3	D1900274	A+ SYS HAM7-L1 Top Level Chamber Assembly	--	1
2	D0900457	AdvLIGO VE HAM5-L1, Vacuum Equipment Assembly	--	1
1	D0900495	AdvLIGO SUS BSC3-L1, XYZ Local CS for ITMX	--	1

LIGO CALIFORNIA INSTITUTE OF TECHNOLOGY
MASSACHUSETTS INSTITUTE OF TECHNOLOGY

SIZE	DWG. NO.	REV.
E	D1800238	v15

SCALE: 1:32 PROJECTION: SHEET 3 OF 9

PART PDM VERSION: v-147
DWG PDM VERSION: v-038
D1800238 A+, Vacuum Equipment, L1, 300m FC

SECTION FC-C: CONT'D

(CONTINUED FROM SHEET 2)

2. HEIGHT OF INDICATED ITEMS ARE NOTIONAL AND SHALL BE PLACED AS REQUIRED TO FULFILL INSTALLATION, ALIGNMENT, AND ACCESS REQUIREMENTS.

3. FOR SUPPORT STAND LOCATIONS AND REFERENCE DESIGNATIONS REFER TO LIGO D2000424

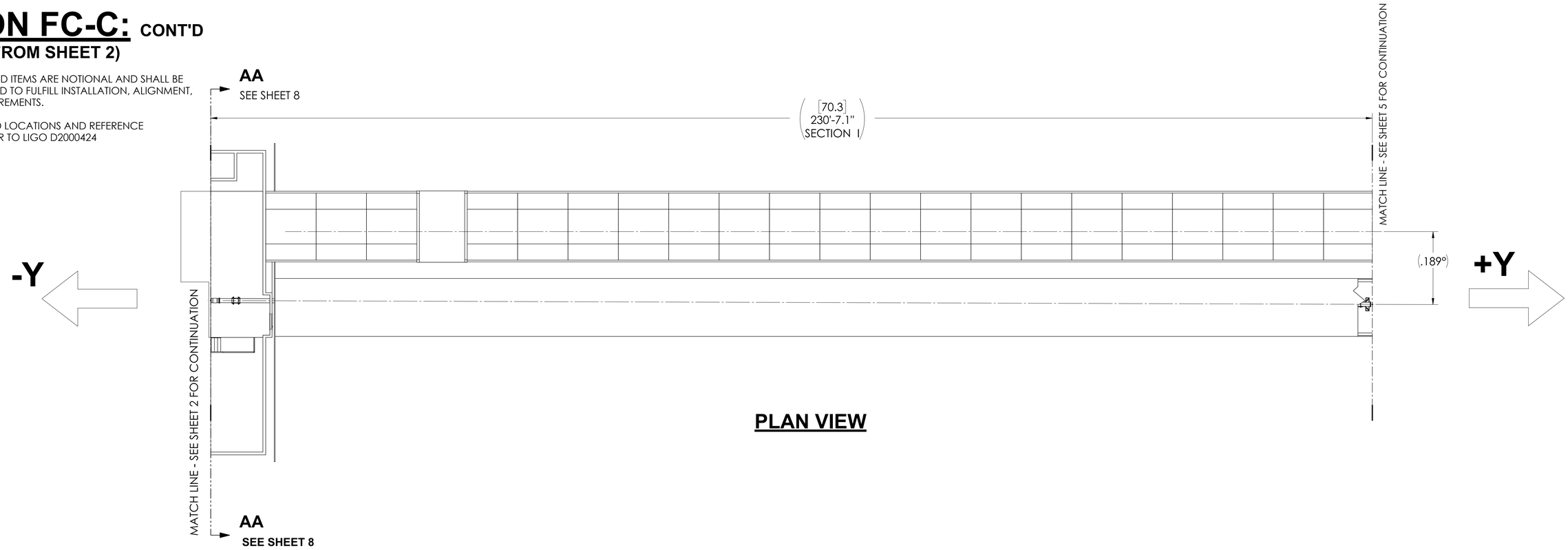

PLAN VIEW

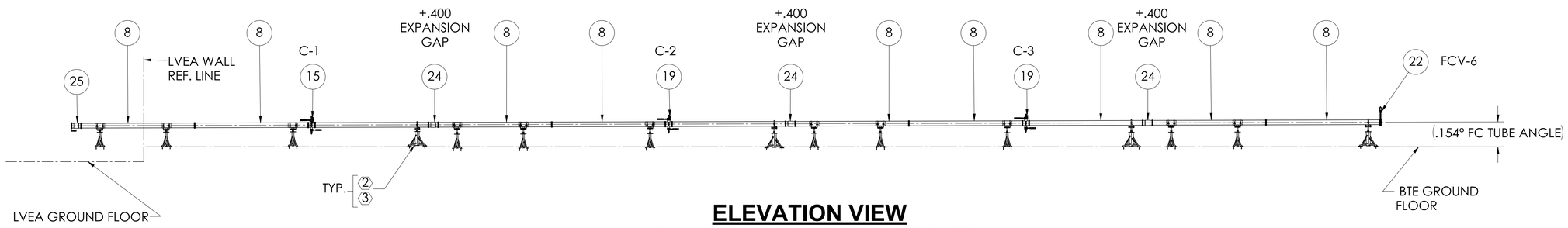

ELEVATION VIEW

(LVEA BUILDING, AND BTEs, NOT SHOWN FOR CLARITY)

ITEM NO.	PART NUMBER	DESCRIPTION	MATERIAL	QTY.
30	D1900424	A+, SLIC, FC TUBE BAFFLE ASSEMBLY	N/A	52
29	D2000337	A+, FC BEAMTUBE BELLOW, 20" LG. (NOMINAL, D1)	AISI 304	1
28		A+, FC BEAMTUBE BELLOW, 20" LG. (NOMINAL, B1)	AISI 304	1
27		A+, FC BEAMTUBE BELLOW, 20" LG. (NOMINAL, A2)	AISI 304	1
26		A+, FC BEAMTUBE BELLOW, 20" LG. (NOMINAL, A1)	AISI 304	1
25		A+, FC BEAMTUBE BELLOW, 20" LG. (NOMINAL)	AISI 304	4
24		A+, FC BEAMTUBE BELLOW, 20" LG. (EXTENDED 20.40)	AISI 304	12
23	D2000372	A+, SQZ, CORNER STATION INTERFACE LAYOUT (L1)	N/A	1
22	10848-UE01-0008 VAT OR EQ.	Series 108 | UHV gate valve. 10" ID	-	5
21	D1900485-08	A+, VE, FC Tube, 6-WAY CROSS (TYPE 8)	304 SSTL	1
20	D1900485-07	A+, VE, FC Tube, 6-WAY CROSS (TYPE 7)	AISI 304	1
19	D1900485-06	A+, VE, FC Tube, 6-WAY CROSS (TYPE 6)	304 SSTL	7
18	D1900485-05	A+, VE, FC Tube, 6-WAY CROSS (TYPE 5)	304 SSTL	2
17	D1900485-04	A+, VE, FC Tube, 6-WAY CROSS (TYPE 4)	AISI 304	1
16	D1900485-03	A+, VE, FC Tube, 6-WAY CROSS (TYPE 3)	304 SSTL	1
15	D1900485-02	A+, VE, FC Tube, 6-WAY CROSS (TYPE 2)	AISI 304	4
14	D1900443-07	A+, VE, FC FC BEAM TUBE, 10 IN. O.D, 12" CF, 12'-6" LG. (TYPE 07)	AISI 304	2
13	D1900443-06	A+, VE, FC FC BEAM TUBE, 10 IN. O.D, 12" CF, 8' LG. (TYPE 06)	AISI 304	1
12	D1900443-05	A+, VE, FC FC BEAM TUBE, 10 IN. O.D, 12" CF, 12' LG. (TYPE 05)	AISI 304	1
11	D1900443-04	A+, VE, FC FC BEAM TUBE, 10 IN. O.D, 12" CF, 15'-3.75" LG. (TYPE 04)	AISI 304	1
10	D1900443-03	A+, VE, FC FC BEAM TUBE, 10 IN. O.D, 12" CF, 14'-2.14" LG. (TYPE 03)	AISI 304	1
9	D1900443-02	A+, VE, FC FC BEAM TUBE, 10 IN. O.D, 12" CF, 15' LG. (TYPE 0)	AISI 304	1
8	D1900443-01	A+, VE, FC FC BEAM TUBE, 10 IN. O.D, 12" CF, 15' LG. (TYPE 01)	AISI 304	41
7	E2100135	SUPPORT TUBE LOCATIONS/KIT	N/A	A/R
6	D2100534	A+, VAC., HAM5/7 Relay Tube Assy.	N/A	1
5	D1900311	A+ SYS HAM8-L1 Top Level Chamber Assembly	--	1
4	D0900493	AdvLIGO VE BSC3-L1, Vacuum Equipment Assembly	N/A	1
3	D1900274	A+ SYS HAM7-L1 Top Level Chamber Assembly	--	1
2	D0900457	AdvLIGO VE HAM5-L1, Vacuum Equipment Assembly	--	1
1	D0900495	AdvLIGO SUS BSC3-L1, XYZ Local CS for ITMX	--	1

PARTS LIST

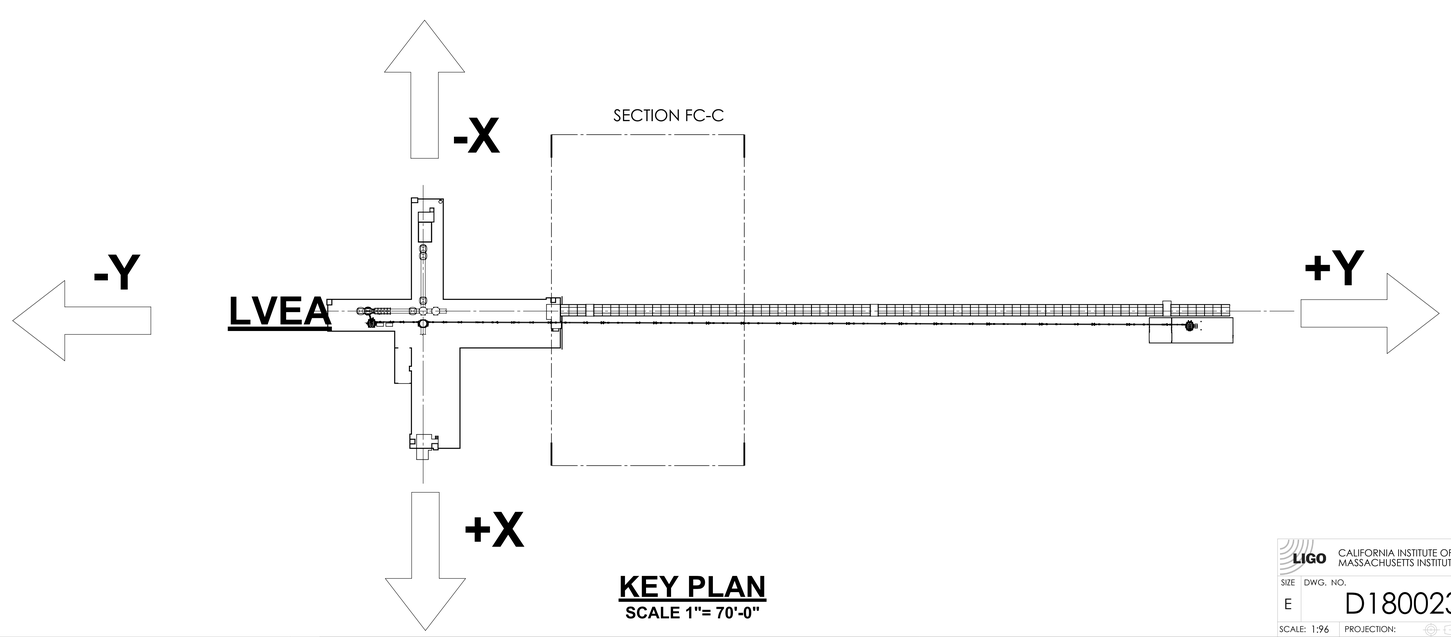

KEY PLAN

SCALE 1"= 70'-0"

LIGO CALIFORNIA INSTITUTE OF TECHNOLOGY
MASSACHUSETTS INSTITUTE OF TECHNOLOGY

SIZE	DWG. NO.	REV.
E	D1800238	v15

SCALE: 1:96 | PROJECTION: | SHEET 4 OF 9

PART PDM VERSION: v-147
DWG PDM VERSION: v-038
D1800238 A+, Vacuum Equipment, L1, 300m FC

SECTION FC-C: CONT'D
(CONTINUED FROM PREVIOUS SHEET)

(2) HEIGHT OF INDICATED ITEMS ARE NOTIONAL AND SHALL BE PLACED AS REQUIRED TO FULFILL INSTALLATION, ALIGNMENT, AND ACCESS REQUIREMENTS.

(3) FOR SUPPORT STAND LOCATIONS AND REFERENCE DESIGNATIONS REFER TO LIGO D2000424

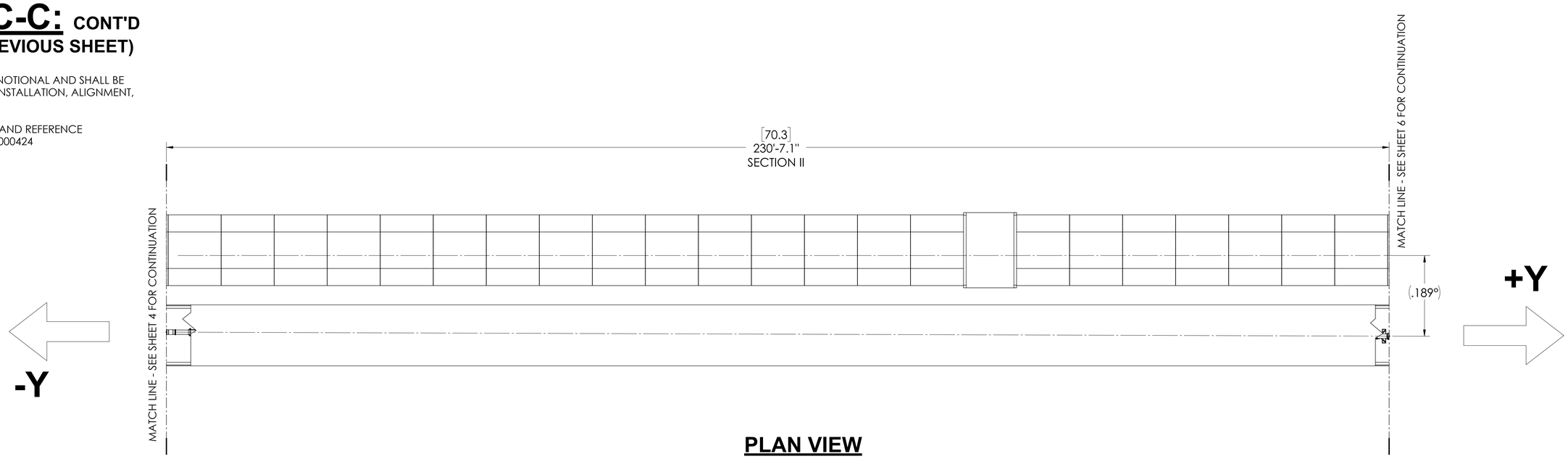

PLAN VIEW

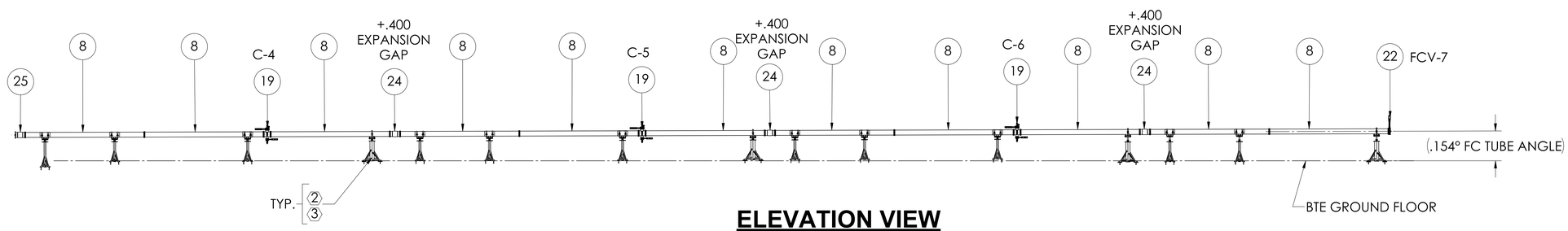

ELEVATION VIEW
(BTEs, NOT SHOWN FOR CLARITY)

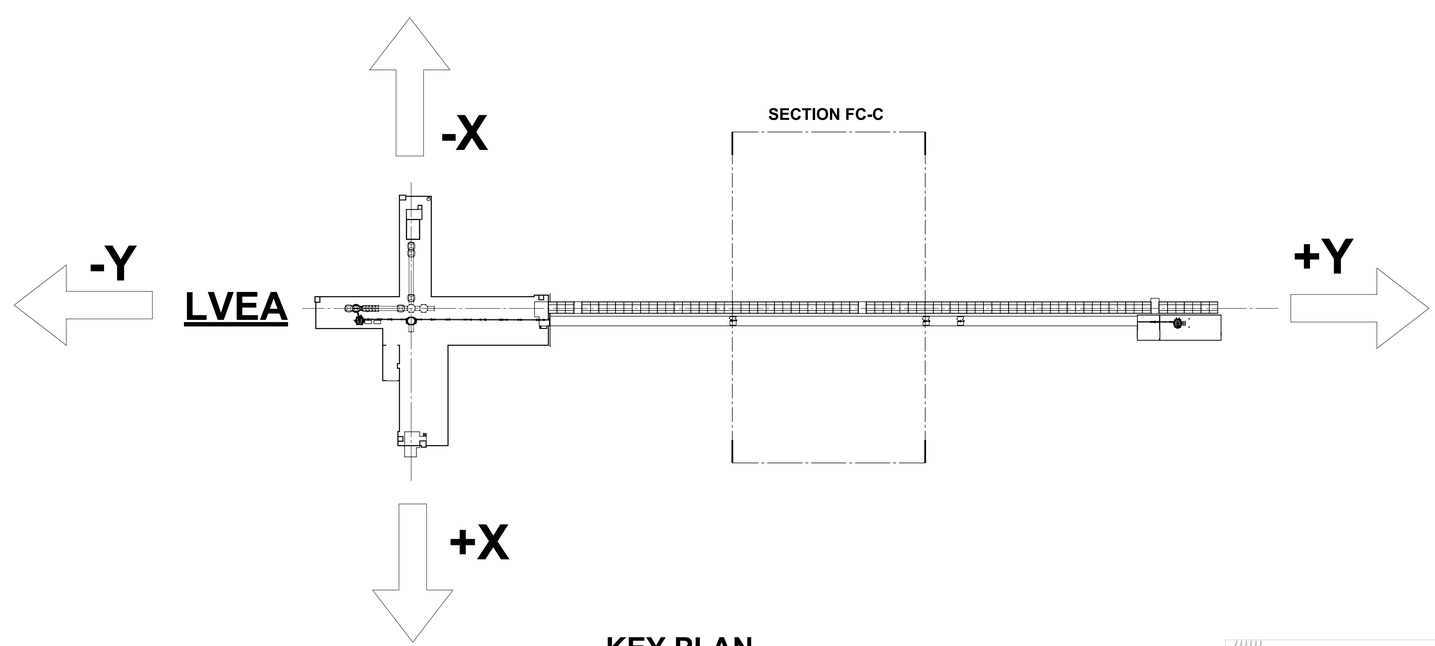

KEY PLAN
SCALE 1"= 70'-0"

ITEM NO.	PART NUMBER	DESCRIPTION	MATERIAL	QTY.
30	D1900424	A+, SLIC, FC TUBE BAFFLE ASSEMBLY	N/A	52
29	D2000337	A+, FC BEAMTUBE BELLOW, 20" LG. (NOMINAL, D1)	AISI 304	1
28		A+, FC BEAMTUBE BELLOW, 20" LG. (NOMINAL, B1)	AISI 304	1
27		A+, FC BEAMTUBE BELLOW, 20" LG. (NOMINAL, A2)	AISI 304	1
26		A+, FC BEAMTUBE BELLOW, 20" LG. (NOMINAL, A1)	-	1
25		A+, FC BEAMTUBE BELLOW, 20" LG. (NOMINAL)	AISI 304	4
24		A+, FC BEAMTUBE BELLOW, 20" LG. (EXTENDED 20.40)	AISI 304	5
23	D2000372	A+, SQZ, CORNER STATION INTERFACE LAYOUT (L1)	N/A	1
22	10848-UE01-0008 VAT OR EQ.	Series 108 | UHV gate valve. 10" ID	-	5
21	D1900485-08	A+, VE, FC Tube, 6-WAY CROSS (TYPE 8)	304 SSTL	1
20	D1900485-07	A+, VE, FC Tube, 6-WAY CROSS (TYPE 7)	AISI 304	1
19	D1900485-06	A+, VE, FC Tube, 6-WAY CROSS (TYPE 6)	304 SSTL	7
18	D1900485-05	A+, VE, FC Tube, 6-WAY CROSS (TYPE 5)	304 SSTL	2
17	D1900485-04	A+, VE, FC Tube, 6-WAY CROSS (TYPE 4)	AISI 304	1
16	D1900485-03	A+, VE, FC Tube, 6-WAY CROSS (TYPE 3)	304 SSTL	1
15	D1900485-02	A+, VE, FC Tube, 6-WAY CROSS (TYPE 2)	AISI 304	4
14	D1900443-07	A+, VE, FC FC BEAM TUBE, 10 IN. O.D, 12" CF, 12'-6" LG. (TYPE 07)	AISI 304	2
13	D1900443-06	A+, VE, FC FC BEAM TUBE, 10 IN. O.D, 12" CF, 8' LG. (TYPE 06)	AISI 304	1
12	D1900443-05	A+, VE, FC FC BEAM TUBE, 10 IN. O.D, 12" CF, 12' LG. (TYPE 05)	-	1
11	D1900443-04	A+, VE, FC FC BEAM TUBE, 10 IN. O.D, 12" CF, 15'-3.75" LG. (TYPE 04)	AISI 304	1
10	D1900443-03	A+, VE, FC FC BEAM TUBE, 10 IN. O.D, 12" CF, 14'-2.14" LG. (TYPE 03)	AISI 304	1
9	D1900443-02	A+, VE, FC FC BEAM TUBE, 10 IN. O.D, 12" CF, 15' LG. (TYPE 0)	AISI 304	1
8	D1900443-01	A+, VE, FC FC BEAM TUBE, 10 IN. O.D, 12" CF, 15' LG. (TYPE 01)	AISI 304	41
7	E2100135	SUPPORT TUBE LOCATIONS/KIT	N/A	1
6	D2100534	A+, VAC., HAM5/7 Relay Tube Assy.	N/A	1
5	D1900311	A+ SYS HAM8-L1 Top Level Chamber Assembly	--	1
4	D0900493	AdvLIGO VE BSC3-L1, Vacuum Equipment Assembly	N/A	1
3	D1900274	A+ SYS HAM7-L1 Top Level Chamber Assembly	--	1
2	D0900457	AdvLIGO VE HAM5-L1, Vacuum Equipment Assembly	--	1
1	D0900495	AdvLIGO SUS BSC3-L1, XYZ Local CS for ITMX	--	1

LIGO
CALIFORNIA INSTITUTE OF TECHNOLOGY
MASSACHUSETTS INSTITUTE OF TECHNOLOGY

SIZE	DWG. NO.	REV.
E	D1800238	v15
SCALE: 1:96	PROJECTION:	SHEET 5 OF 9

PART PDM VERSION: v-147
DWG PDM VERSION: v-038
D1800238 A+, Vacuum Equipment, L1, 300m FC

SECTION FC-C: CONT'D
(CONTINUED FROM PREVIOUS SHEET)

(2) HEIGHT OF INDICATED ITEMS ARE NOTIONAL AND SHALL BE PLACED AS REQUIRED TO FULFILL INSTALLATION, ALIGNMENT, AND ACCESS REQUIREMENTS.

(3) FOR SUPPORT STAND LOCATIONS AND REFERENCE DESIGNATIONS REFER TO LIGO D2000424

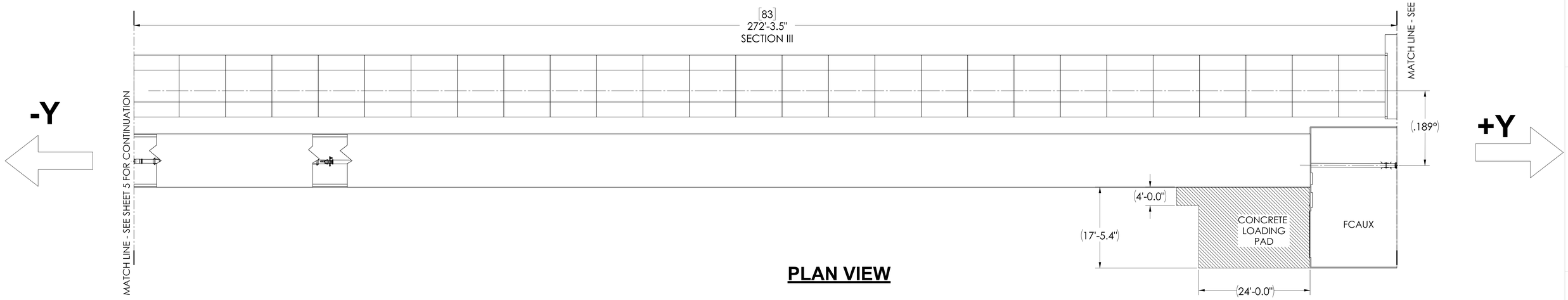

PLAN VIEW

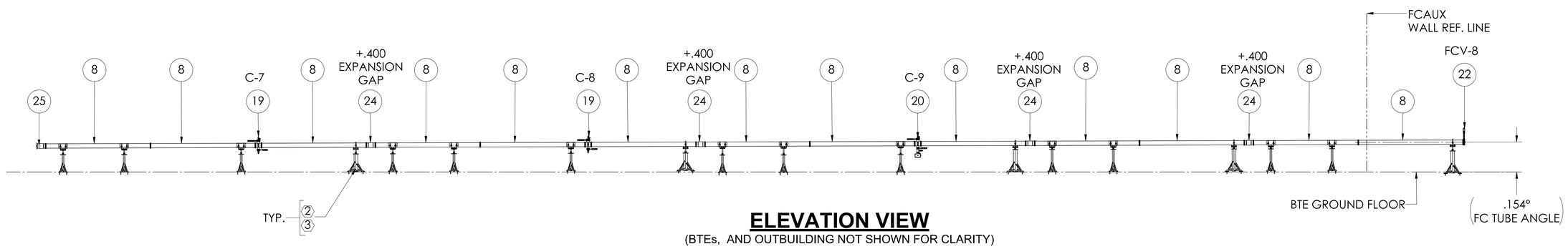

ELEVATION VIEW

(BTEs, AND OUTBUILDING NOT SHOWN FOR CLARITY)

ITEM NO.	PART NUMBER	DESCRIPTION	MATERIAL	QTY.
30	D1900424	A+, SLIC, FC TUBE BAFFLE ASSEMBLY	N/A	52
29	D2000337	A+, FC BEAMTUBE BELLOW, 20" LG. (NOMINAL, D1)	AISI 304	1
28		A+, FC BEAMTUBE BELLOW, 20" LG. (NOMINAL, B1)	AISI 304	1
27		A+, FC BEAMTUBE BELLOW, 20" LG. (NOMINAL, A2)	AISI 304	1
26		A+, FC BEAMTUBE BELLOW, 20" LG. (NOMINAL, A1)	-	1
25		A+, FC BEAMTUBE BELLOW, 20" LG. (NOMINAL)	AISI 304	4
24		A+, FC BEAMTUBE BELLOW, 20" LG. (EXTENDED 20.40)	AISI 304	12
23	D2000372	A+, SQZ, CORNER STATION INTERFACE LAYOUT (L1)	N/A	1
22	10848-UE01-0008 VAT OR EQ.	Series 108 | UHV gate valve. 10" ID	-	5
21	D1900485-08	A+, VE, FC Tube, 6-WAY CROSS (TYPE 8)	304 SSTL	1
20	D1900485-07	A+, VE, FC Tube, 6-WAY CROSS (TYPE 7)	AISI 304	1
19	D1900485-06	A+, VE, FC Tube, 6-WAY CROSS (TYPE 6)	304 SSTL	7
18	D1900485-05	A+, VE, FC Tube, 6-WAY CROSS (TYPE 5)	304 SSTL	2
17	D1900485-04	A+, VE, FC Tube, 6-WAY CROSS (TYPE 4)	AISI 304	1
16	D1900485-03	A+, VE, FC Tube, 6-WAY CROSS (TYPE 3)	304 SSTL	1
15	D1900485-02	A+, VE, FC Tube, 6-WAY CROSS (TYPE 2)	AISI 304	4
14	D1900443-07	A+, VE, FC FC BEAM TUBE, 10 IN. O.D, 12" CF, 12'-6" LG. (TYPE 07)	-	2
13	D1900443-06	A+, VE, FC FC BEAM TUBE, 10 IN. O.D, 12" CF, 8' LG. (TYPE 06)	AISI 304	1
12	D1900443-05	A+, VE, FC FC BEAM TUBE, 10 IN. O.D, 12" CF, 12' LG. (TYPE 05)	-	1
11	D1900443-04	A+, VE, FC FC BEAM TUBE, 10 IN. O.D, 12" CF, 15'-3.75" LG. (TYPE 04)	AISI 304	1
10	D1900443-03	A+, VE, FC FC BEAM TUBE, 10 IN. O.D, 12" CF, 14'-2.14" LG. (TYPE 03)	AISI 304	1
9	D1900443-02	A+, VE, FC FC BEAM TUBE, 10 IN. O.D, 12" CF, 15' LG. (TYPE 0)	AISI 304	1
8	D1900443-01	A+, VE, FC FC BEAM TUBE, 10 IN. O.D, 12" CF, 15' LG. (TYPE 01)	AISI 304	41
7	E2100135	SUPPORT TUBE LOCATIONS/KIT	N/A	1
6	D2100534	A+, VAC., HAM5/7 Relay Tube Assy.	N/A	1
5	D1900311	A+ SYS HAM8-L1 Top Level Chamber Assembly	--	1
4	D0900493	AdvLIGO VE BSC3-L1, Vacuum Equipment Assembly	N/A	1
3	D1900274	A+ SYS HAM7-L1 Top Level Chamber Assembly	--	1
2	D0900457	AdvLIGO VE HAM5-L1, Vacuum Equipment Assembly	--	1
1	D0900495	AdvLIGO SUS BSC3-L1, XYZ Local CS for ITMX	--	1

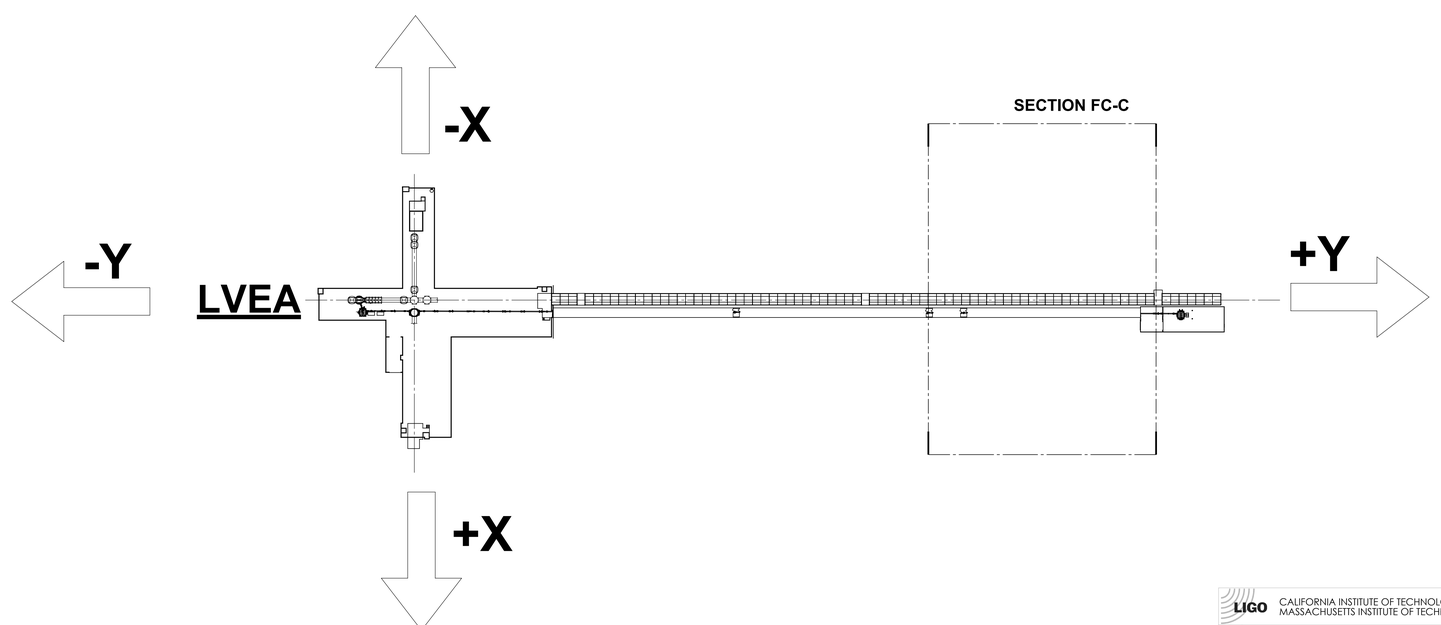

KEY PLAN

SCALE 1"= 70'-0"

LIGO CALIFORNIA INSTITUTE OF TECHNOLOGY MASSACHUSETTS INSTITUTE OF TECHNOLOGY

SIZE	DWG. NO.	REV.
E	D1800238	v15

SCALE: 1:96 PROJECTION: SHEET 6 OF 9

PART PDM VERSION: v-147
DWG PDM VERSION: v-038
D1800238 A+, Vacuum Equipment, L1, 300m FC

OUTBUILDING

NOTES CONTINUED:

(2) HEIGHT OF INDICATED ITEMS ARE NOTIONAL AND SHALL BE PLACED AS REQUIRED TO FULFILL INSTALLATION, ALIGNMENT, AND ACCESS REQUIREMENTS.

(3) FOR SUPPORT STAND LOCATIONS AND REFERENCE DESIGNATIONS REFER TO LIGO D2000424

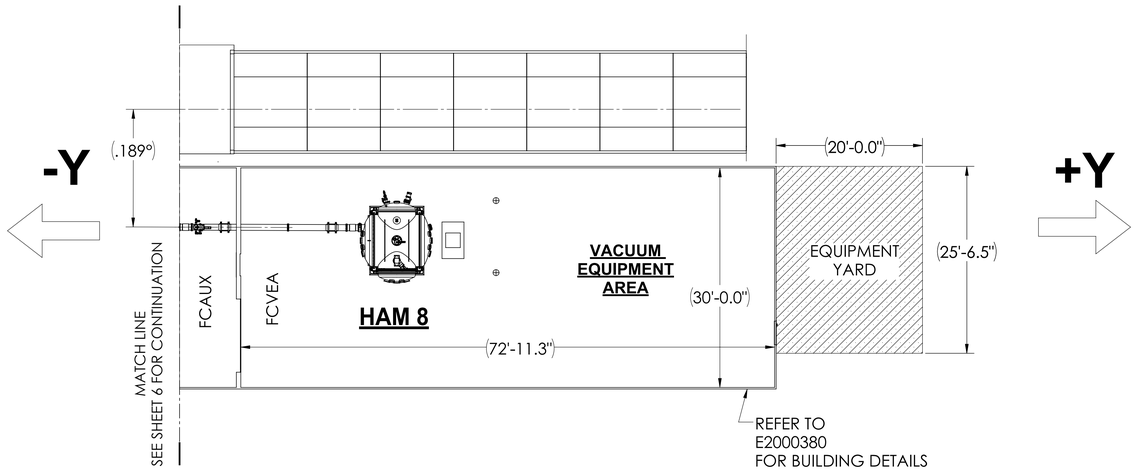

PLAN VIEW

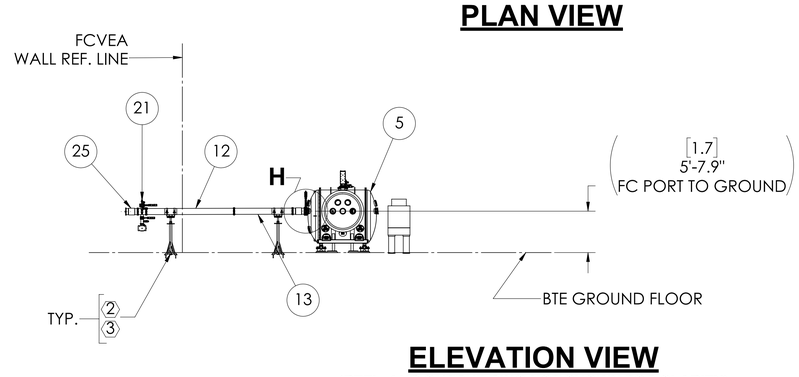

ELEVATION VIEW

(BTE's AND OUTBUILDING NOT SHOWN FOR CLARITY)

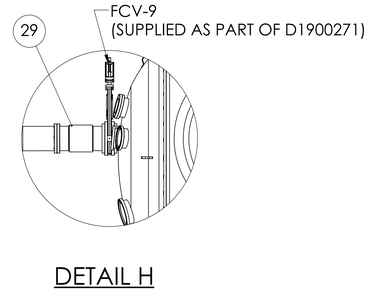

DETAIL H
SCALE 1 : 24

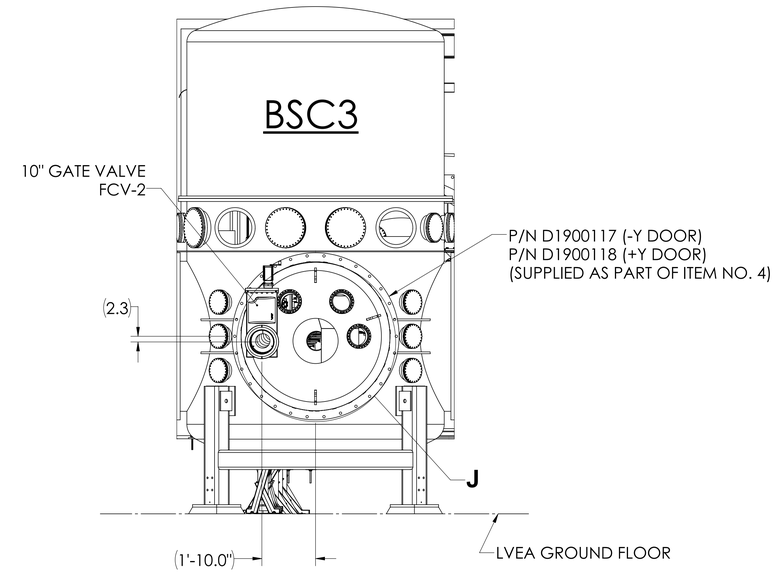

SECTION AB-AB

ROTATED 90° CCW
(PARTIAL VIEW, LVEA BUILDING AND ADJACENT VAC. EQUIPMENT OMITTED FOR CLARITY)
SCALE 1 : 24
SEE SHEET 2 FOR REF.

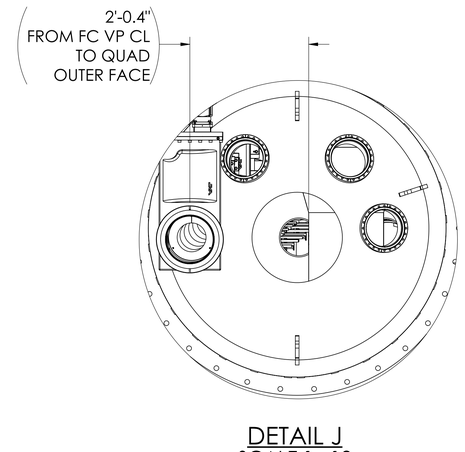

DETAIL J
SCALE 1 : 12

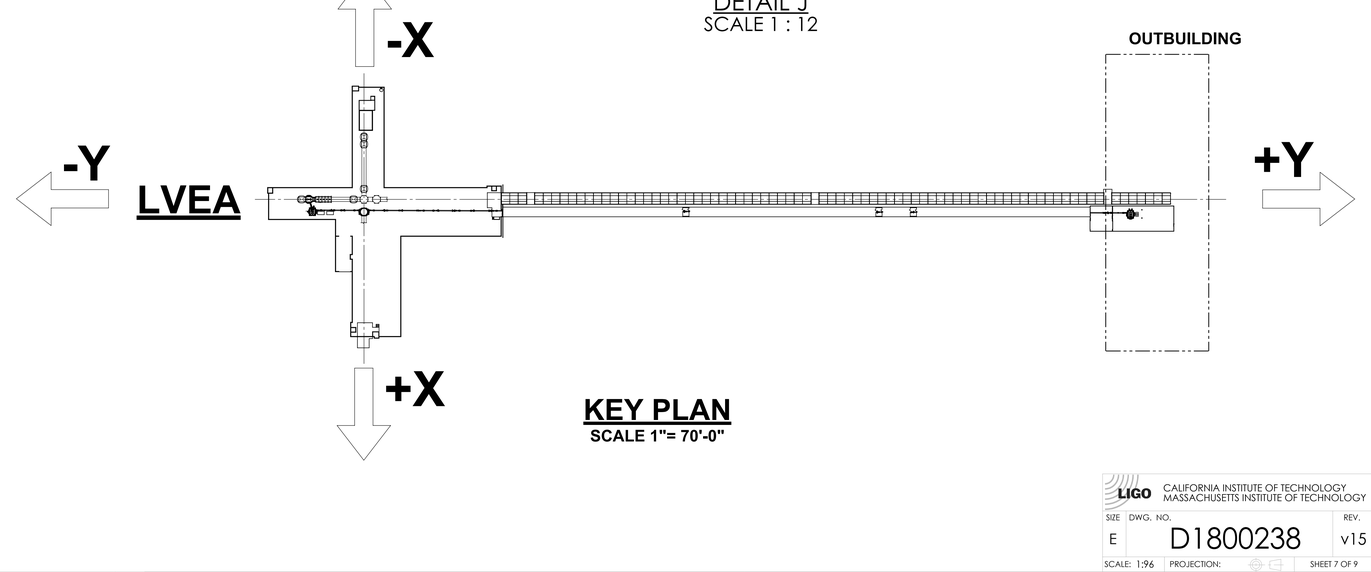

KEY PLAN

SCALE 1"= 70'-0"

ITEM NO.	PART NUMBER	DESCRIPTION	MATERIAL	QTY.
30	D1900424	A+, SLIC, FC TUBE BAFFLE ASSEMBLY	N/A	52
29	D2000337	A+, FC BEAMTUBE BELLOW, 20" LG. (NOMINAL, D1)	AISI 304	1
28		A+, FC BEAMTUBE BELLOW, 20" LG. (NOMINAL, B1)	AISI 304	1
27		A+, FC BEAMTUBE BELLOW, 20" LG. (NOMINAL, A2)	AISI 304	1
26		A+, FC BEAMTUBE BELLOW, 20" LG. (NOMINAL, A1)	-	1
25		A+, FC BEAMTUBE BELLOW, 20" LG. (NOMINAL)	AISI 304	4
24		A+, FC BEAMTUBE BELLOW, 20" LG. (EXTENDED 20.40)	AISI 304	12
23	D2000372	A+, SQZ, CORNER STATION INTERFACE LAYOUT (L1)	N/A	1
22	10848-UE01-0008 VAT OR EQ.	Series 108 | UHV gate valve. 10" ID	-	5
21	D1900485-08	A+, VE, FC Tube, 6-WAY CROSS (TYPE 8)	304 SSTL	1
20	D1900485-07	A+, VE, FC Tube, 6-WAY CROSS (TYPE 7)	AISI 304	1
19	D1900485-06	A+, VE, FC Tube, 6-WAY CROSS (TYPE 6)	304 SSTL	7
18	D1900485-05	A+, VE, FC Tube, 6-WAY CROSS (TYPE 5)	304 SSTL	2
17	D1900485-04	A+, VE, FC Tube, 6-WAY CROSS (TYPE 4)	AISI 304	1
16	D1900485-03	A+, VE, FC Tube, 6-WAY CROSS (TYPE 3)	304 SSTL	1
15	D1900485-02	A+, VE, FC Tube, 6-WAY CROSS (TYPE 2)	AISI 304	4
14	D1900443-07	A+, VE, FC FC BEAM TUBE, 10 IN. O.D, 12" CF, 12'-6" LG. (TYPE 07)	-	2
13	D1900443-06	A+, VE, FC FC BEAM TUBE, 10 IN. O.D, 12" CF, 8' LG. (TYPE 06)	AISI 304	1
12	D1900443-05	A+, VE, FC FC BEAM TUBE, 10 IN. O.D, 12" CF, 12' LG. (TYPE 05)	-	1
11	D1900443-04	A+, VE, FC FC BEAM TUBE, 10 IN. O.D, 12" CF, 15'-3.75" LG. (TYPE 04)	AISI 304	1
10	D1900443-03	A+, VE, FC FC BEAM TUBE, 10 IN. O.D, 12" CF, 14'-2.14" LG. (TYPE 03)	AISI 304	1
9	D1900443-02	A+, VE, FC FC BEAM TUBE, 10 IN. O.D, 12" CF, 15' LG. (TYPE 0)	AISI 304	1
8	D1900443-01	A+, VE, FC FC BEAM TUBE, 10 IN. O.D, 12" CF, 15' LG. (TYPE 01)	AISI 304	41
7	E2100135	SUPPORT TUBE LOCATIONS/KIT	N/A	1
6	D2100534	A+, VAC., HAM5/7 Relay Tube Assy.	N/A	1
5	D1900311	A+ SYS HAM8-L1 Top Level Chamber Assembly	--	1
4	D0900493	AdvLIGO VE BSC3-L1, Vacuum Equipment Assembly	N/A	1
3	D1900274	A+ SYS HAM7-L1 Top Level Chamber Assembly	--	1
2	D0900457	AdvLIGO VE HAM5-L1, Vacuum Equipment Assembly	--	1
1	D0900495	AdvLIGO SUS BSC3-L1, XYZ Local CS for ITMX	--	1

LIGO CALIFORNIA INSTITUTE OF TECHNOLOGY
MASSACHUSETTS INSTITUTE OF TECHNOLOGY

SIZE	DWG. NO.	REV.
E	D1800238	v15

SCALE: 1:96 | PROJECTION: | SHEET 7 OF 9

PART PDM VERSION: v-147
DWG PDM VERSION: v-038
D1800238 A+, Vacuum Equipment, L1, 300m FC

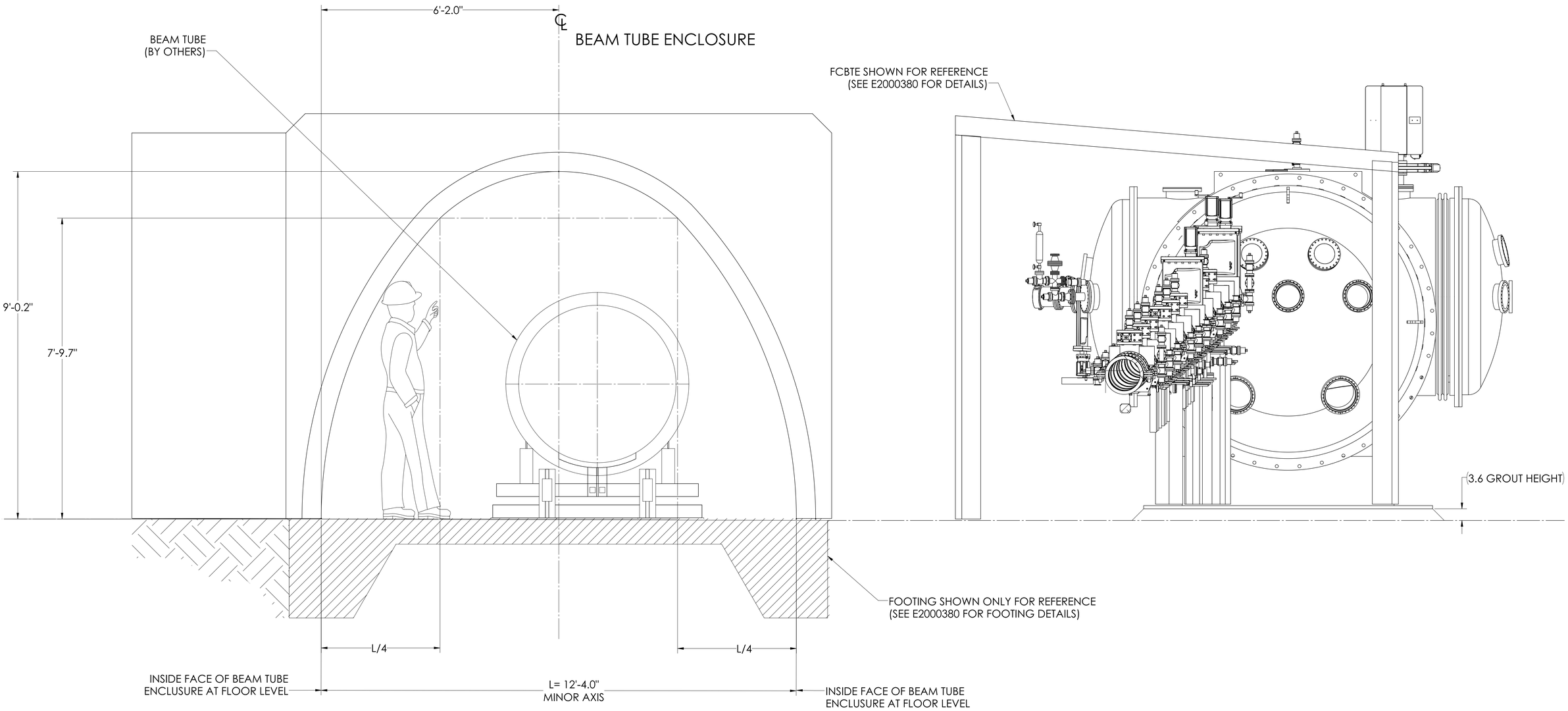

SECTION AA-AA

SCALE 1 : 12
(OUTBUILDING, NOT SHOWN FOR CLARITY)
SEE SHEET 4

LIGO CALIFORNIA INSTITUTE OF TECHNOLOGY
MASSACHUSETTS INSTITUTE OF TECHNOLOGY

SIZE	DWG. NO.	REV.
E	D1800238	v15

SCALE: 1:96 | PROJECTION: | SHEET 8 OF 9

PART PDM VERSION: v-147
DWG PDM VERSION: v-038
D1800238 A+, Vacuum Equipment, L1, 300m FC

6-WAY CROSSES: POSITIONS WRT X-AXIS

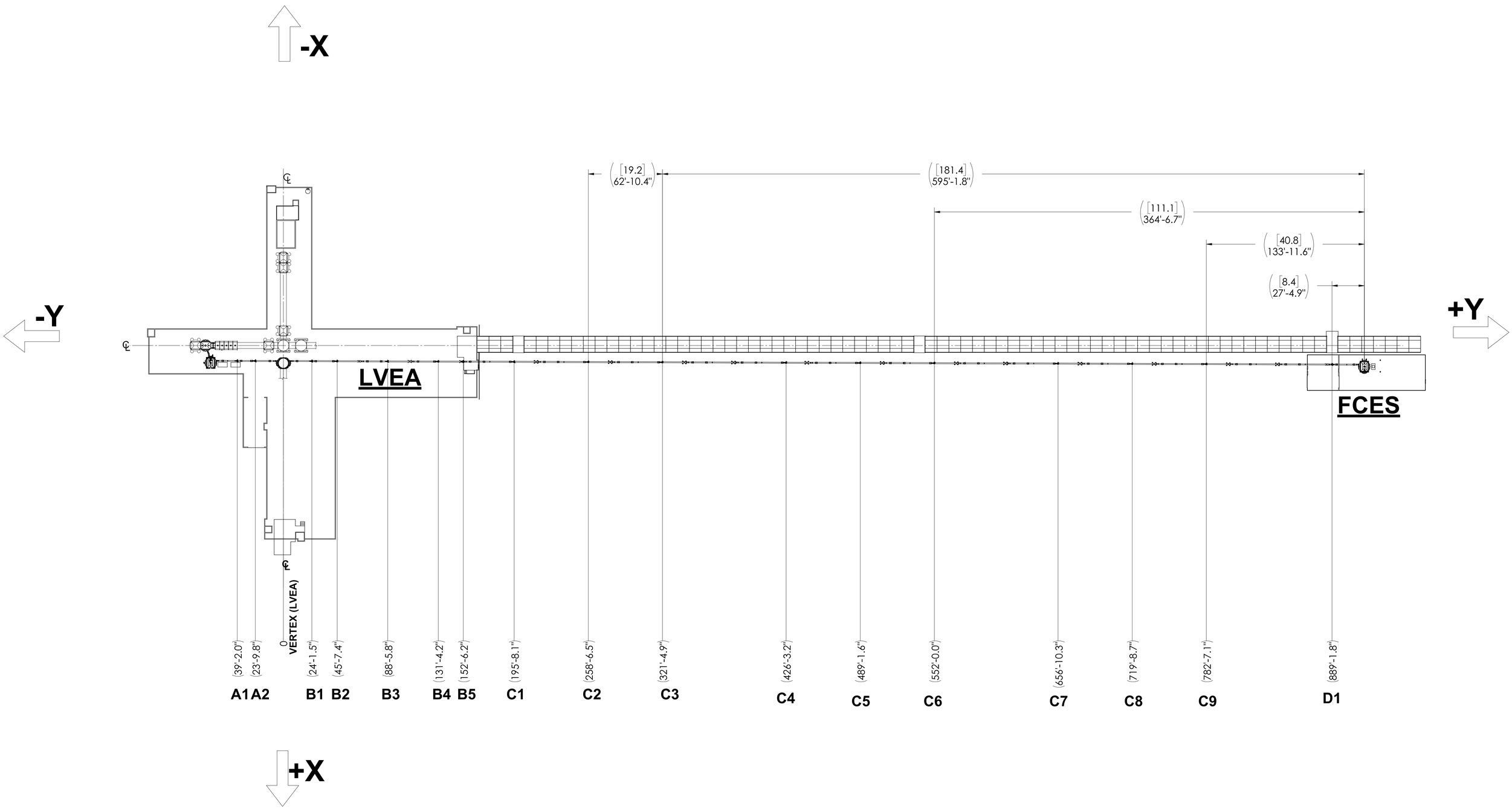

LIGO CALIFORNIA INSTITUTE OF TECHNOLOGY
MASSACHUSETTS INSTITUTE OF TECHNOLOGY

SIZE	DWG. NO.	REV.
E	D1800238	v15

SCALE: 1:360 PROJECTION: SHEET 9 OF 9

PART PDM VERSION: v-147
DWG PDM VERSION: v-038
D1800238 A+, Vacuum Equipment, L1, 300m FC