REV.	DATE	DCN #	DRAWING TREE #
v1	02 OCT 2015	E1500344-x0	-
-	-	-	-
-	-	-	-

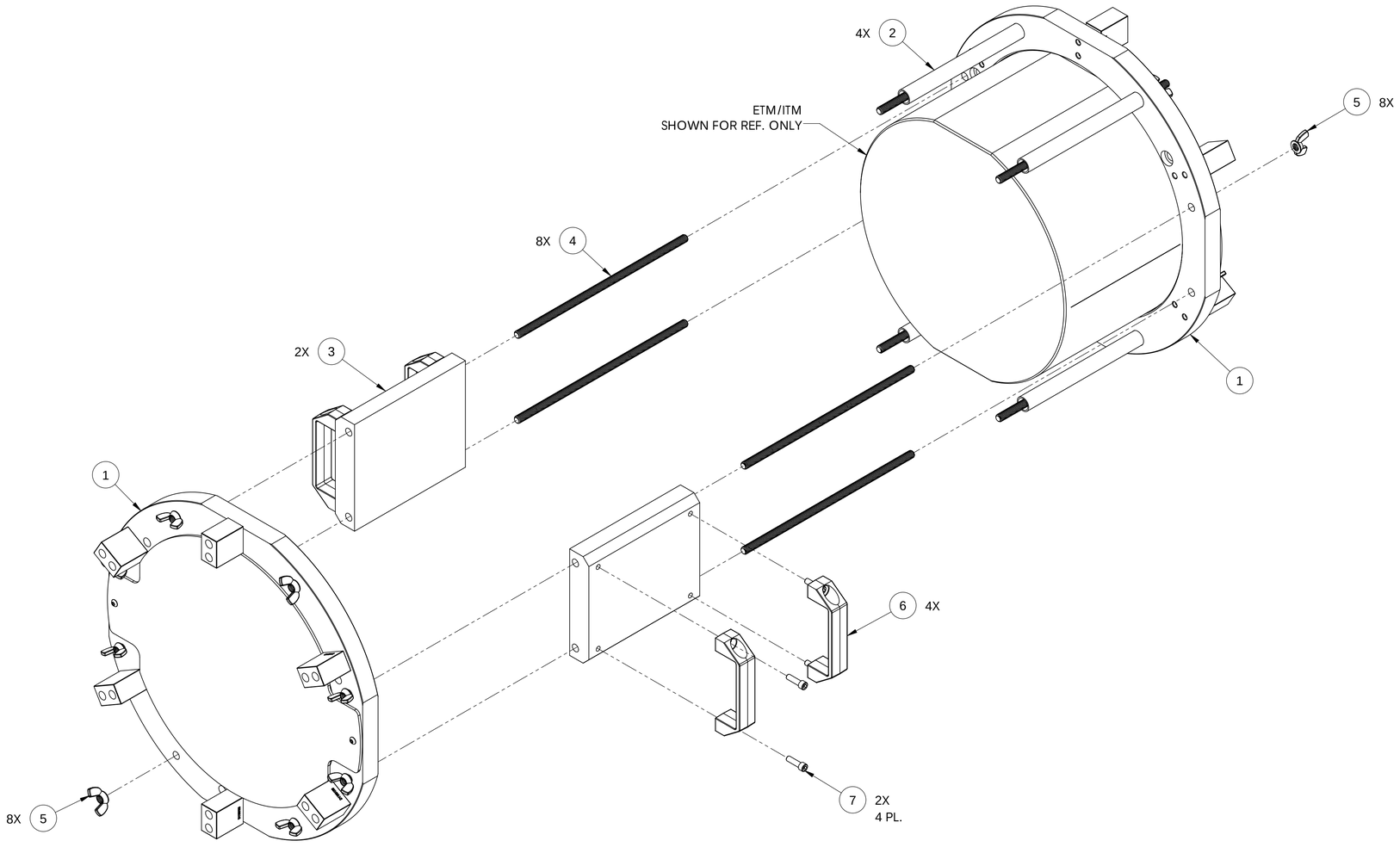

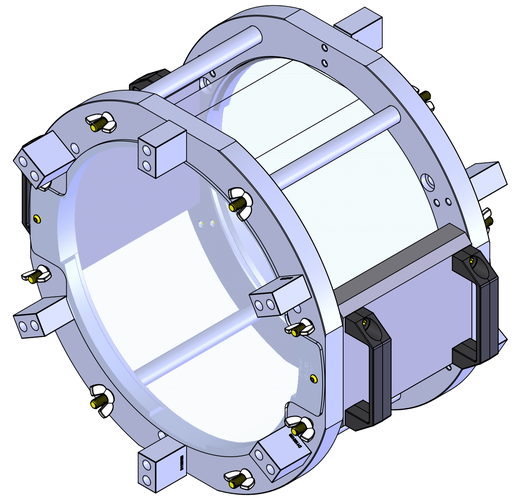

ISO VIEW
(ASSEMBLED)

ITEM NO.	PART NUMBER	DESCRIPTION	MATERIAL	QTY.
7	92200A628 McMASTER-OR EQ.	SCREW, SHC, 3/18-16 X .88 Lg.	-	8
6	5-KHO-10 ESSENTRA OR EQ.	REINFORCED PLASTIC HANDLE	-	4
5	94924A031 McMASTER-CARR OR EQ.	3/8-16 Plastic Wing Nut	Nylon 6/6	16
4	95412A563 McMASTER-CARR OR EQ.	THREADED STUD, 38-16 X 11" LG.	18-8 SSTL	8
3	865306 L3 TINSLEY	SUPPORT BLOCK	DELRIN	2
2	D1100125	PLASTIC TUBE, ITM-ETM INSPECTION FIXTURE	WHITE DELRIN	4
1	D1500321-02	aLIGO, COC, Inspection fixture, Inspection Ring Assy.	SEE NOTES	2

PARTS LIST

NOTES AND TOLERANCES: (UNLESS OTHERWISE SPECIFIED)

MATERIAL: SEE NOTES
FINISH: - σinch

LIGO CALIFORNIA INSTITUTE OF TECHNOLOGY
MASSACHUSETTS INSTITUTE OF TECHNOLOGY

SYSTEM: ADVANCED LIGO
SUB-SYSTEM: COC
NEXT ASSY: D1500339

PART NAME: aLIGO, COC, INSPECTION FIXTURE ASSY.

DESIGNER	E.SANCHEZ	01 OCT 2015	SIZE: D
DRAFTER	E.SANCHEZ	02 OCT 2015	DWG. NO.: D1500326
CHECKER	SEE DCC	SEE DCC	REV.: v1
APPROVAL	SEE DCC	SEE DCC	SCALE: NTS

PROJECTION:
SHEET 1 OF 1

D1500326 aLIGO, COC, INSPECTION FIXTURE ASSY., PART PDM REV. X-003, DRAWING PDM REV. X-001