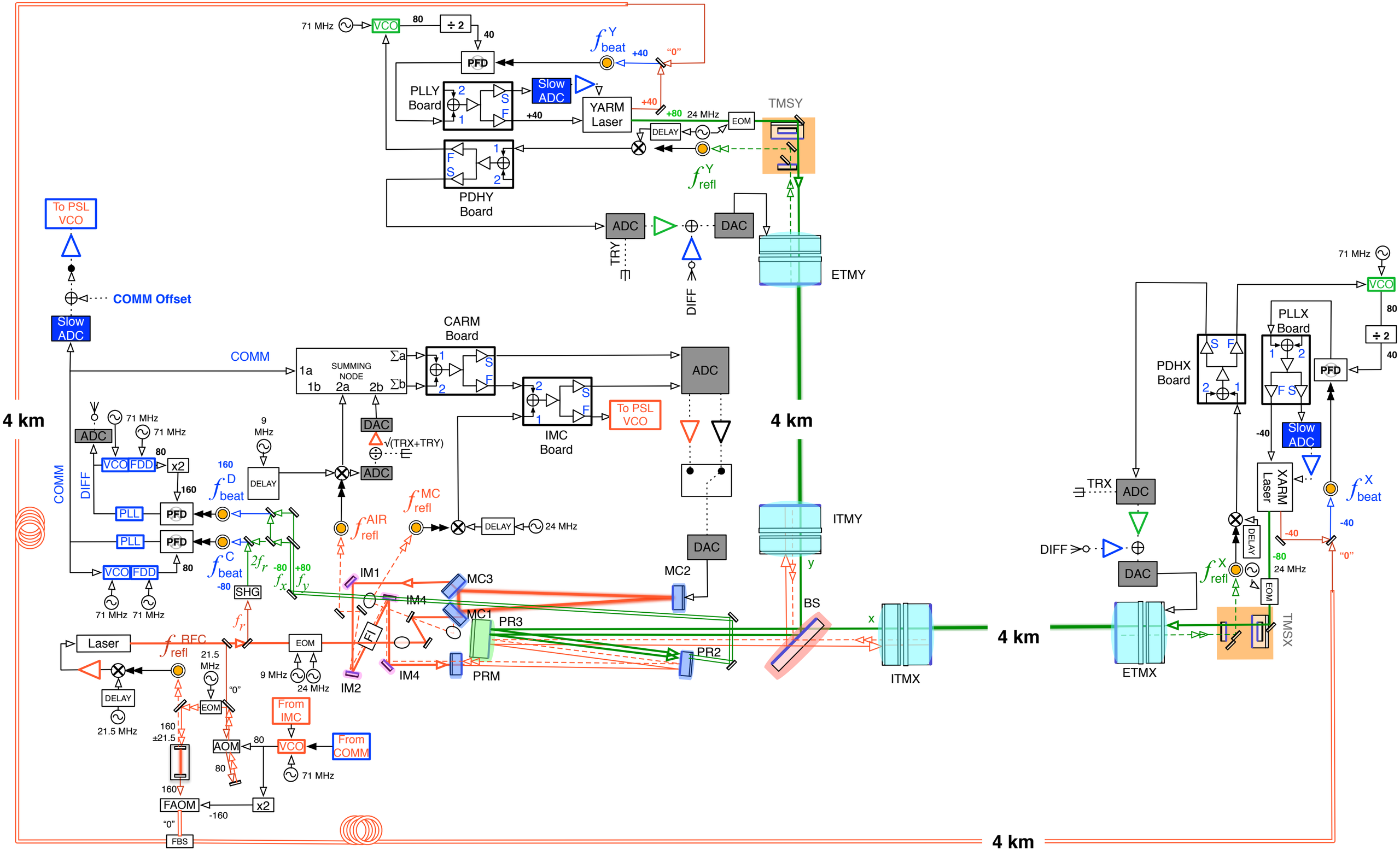
71 MHz
VCO
80
÷ 2
40
PFD
f^{Y}_{beat}
+40
"0"
PLLY Board
Slow ADC
YARM Laser
+40
+80
24 MHz
EOM
TMSY
DELAY
PDHY Board
f^{Y}_{refl}
ADC
DAC
TRY
DIFF
ETMY
To PSL VCO
COMM Offset
Slow ADC
CARM Board
COMM
1a
1b
SUMMING NODE
2a
2b
Σa
Σb
ADC
4 km
71 MHz
ADC
71 MHz
VCO
FDD
x2
80
160
DIFF
9 MHz
DAC
√(TRX+TRY)
ADC
DELAY
f^{D}_{beat}
IMC Board
To PSL VCO
4 km
PLL
PFD
f^{MC}_{refl}
f^{AIR}_{refl}
DELAY
24 MHz
ITMY
PLL
PFD
f^{C}_{beat}
$2f_r$
-80
+80
f_x
f_y
DAC
MC2
y
VCO
FDD
80
71 MHz
71 MHz
SHG
IM1
MC3
IM4
MC1
BS
x
f_r
Laser
f^{BFC}_{refl}
21.5 MHz
EOM
PR3
PR2
4 km
9 MHz
24 MHz
IM2
IM4
PRM
ITMX
DELAY
21.5 MHz
EOM
"0"
From IMC
160
±21.5
AOM
80
VCO
From COMM
80
71 MHz
160
FAOM
x2
-160
"0"
FBS
4 km
71 MHz
VCO
80
PLLX Board
÷ 2
40
PDHX Board
PFD
-40
Slow ADC
TRX
ADC
XARM Laser
f^{X}_{beat}
-40
DIFF
DELAY
-40
"0"
DAC
f^{X}_{refl}
-80
24 MHz
EOM
TMSX
ETMX