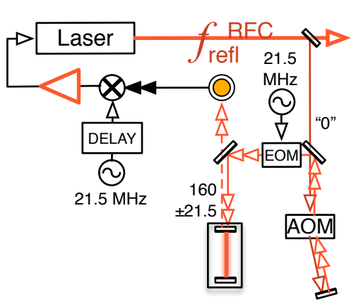
Laser
f_{refl}
RFC
21.5
MHz
"0"
DELAY
21.5 MHz
EOM
160
±21.5
AOM

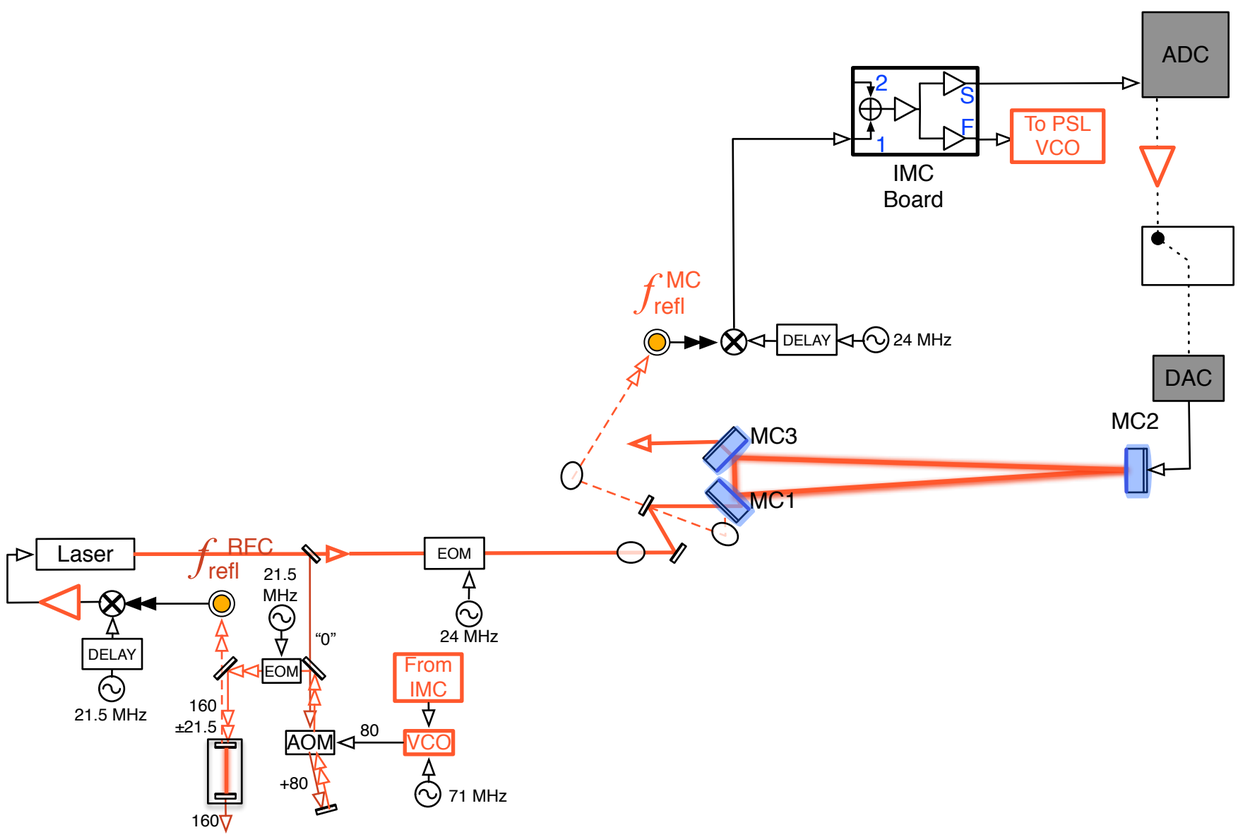
ADC
2
S
F
1
To PSL
VCO
IMC
Board
f^{MC}_{refl}
DELAY
24 MHz
DAC
MC2
MC3
MC1
Laser
f^{RFC}_{refl}
21.5
MHz
EOM
24 MHz
DELAY
21.5 MHz
"0"
EOM
From
IMC
160
±21.5
AOM
80
VCO
+80
71 MHz
160

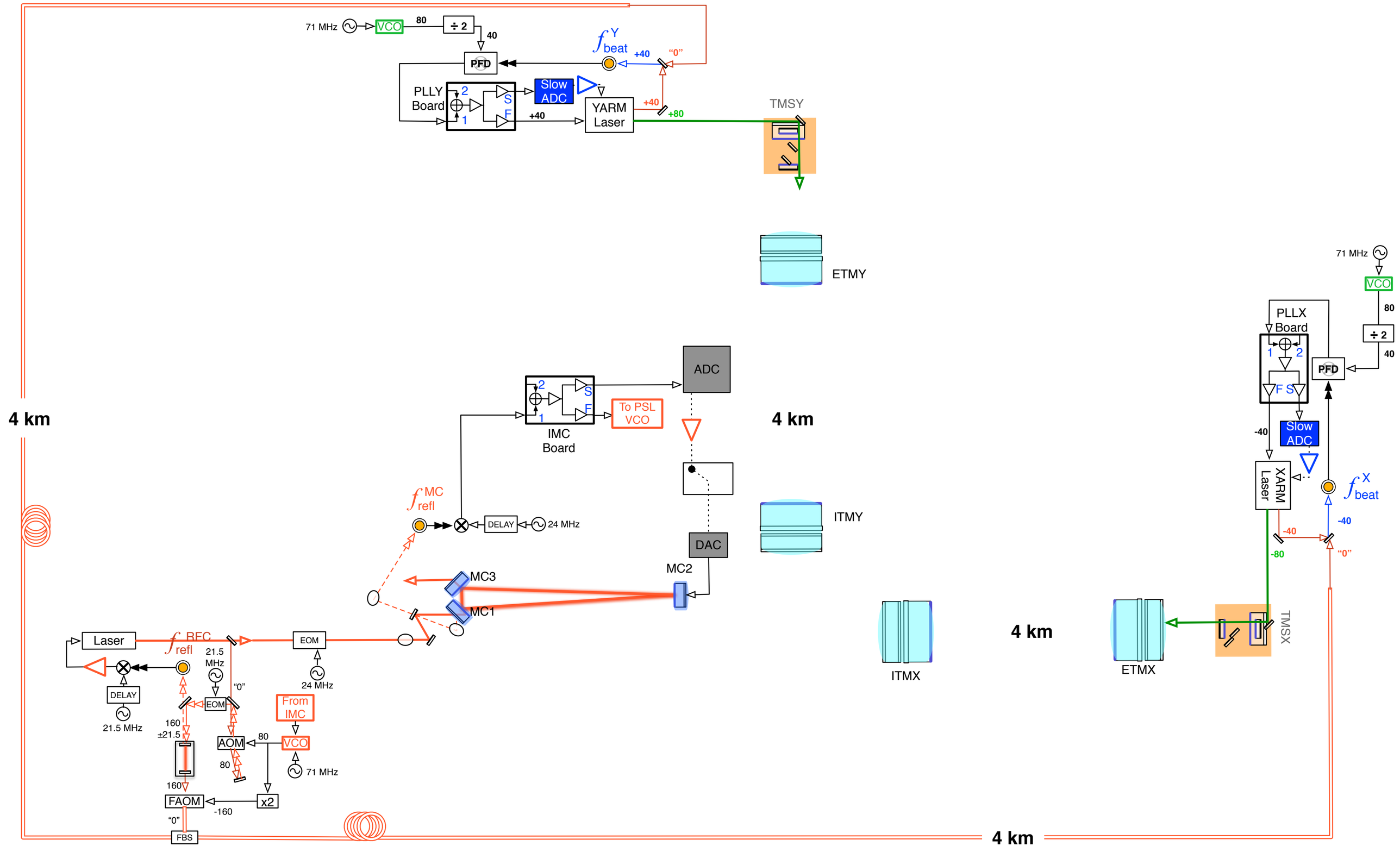
71 MHz
VCO
80
÷ 2
40
PFD
f^{Y}_{beat}
+40
"0"
PLLY Board
2
1
S
F
Slow ADC
+40
YARM Laser
+40
+80
TMSY
ETMY
4 km
ADC
IMC Board
To PSL VCO
4 km
f^{MC}_{refl}
DELAY
24 MHz
ITMY
DAC
MC2
MC3
MC1
Laser
f^{REC}_{refl}
21.5 MHz
EOM
24 MHz
DELAY
21.5 MHz
"0"
EOM
From IMC
160
±21.5
AOM
80
80
VCO
71 MHz
160
FAOM
x2
-160
"0"
FBS
ITMX
4 km
ETMX
TMSX
71 MHz
VCO
80
PLLX Board
÷ 2
40
PFD
1
2
F S
-40
Slow ADC
XARM Laser
f^{X}_{beat}
-40
-40
-80
"0"
4 km

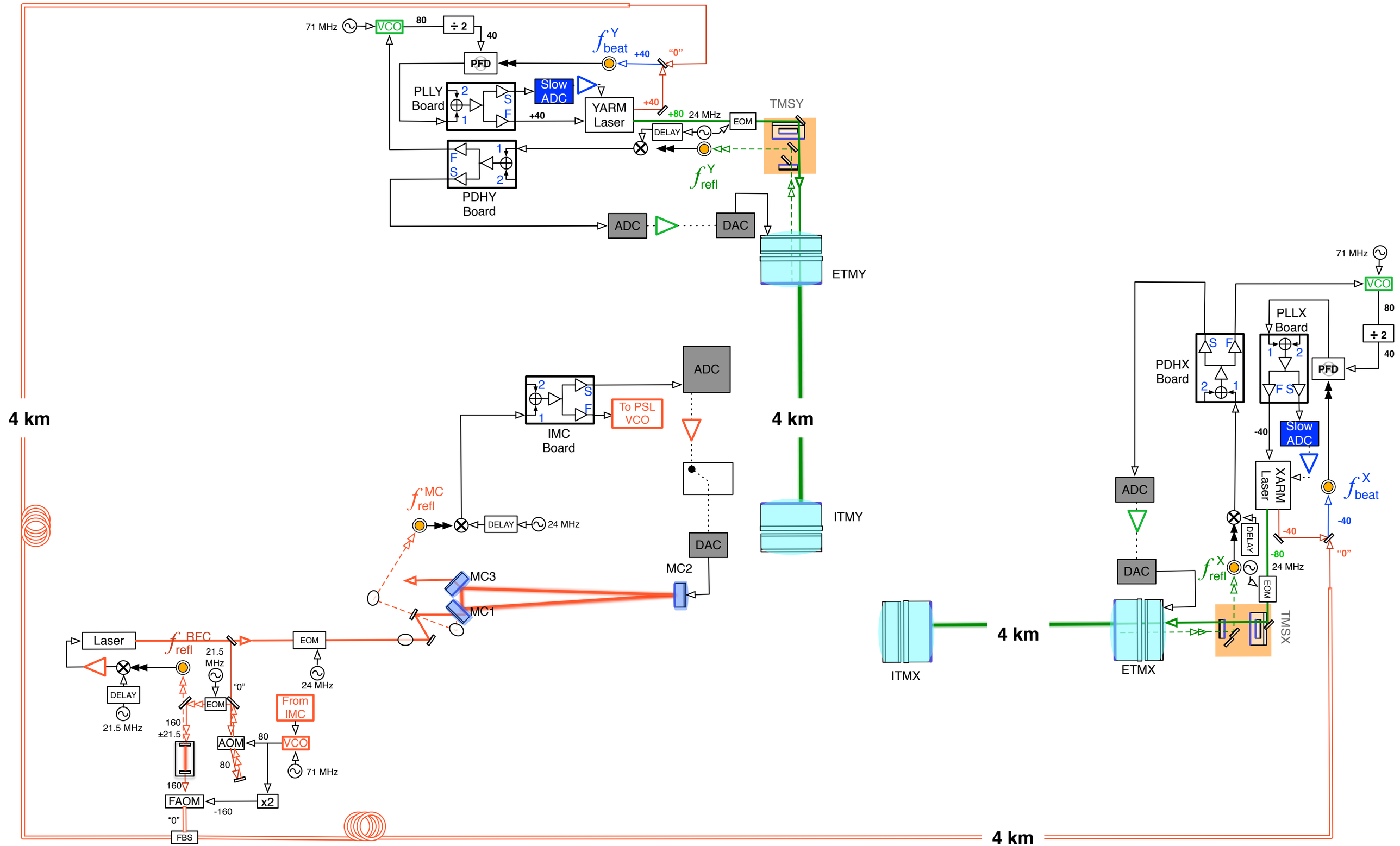
71 MHz
VCO
80
÷ 2
40
PFD
f^{Y}_{beat}
+40
"0"
PLLY Board
Slow ADC
YARM Laser
+40
+80
24 MHz
EOM
TMSY
DELAY
PDHY Board
f^{Y}_{refl}
ADC
DAC
ETMY
4 km
ADC
IMC Board
To PSL VCO
4 km
f^{MC}_{refl}
DELAY
24 MHz
DAC
ITMY
MC3
MC2
MC1
Laser
f^{BFC}_{refl}
21.5 MHz
EOM
24 MHz
DELAY
21.5 MHz
"0"
EOM
From IMC
160
±21.5
AOM
80
VCO
80
71 MHz
160
FAOM
x2
-160
"0"
FBS
4 km
ITMX
4 km
ETMX
71 MHz
VCO
80
÷ 2
40
PLLX Board
PDHX Board
PFD
-40
Slow ADC
XARM Laser
f^{X}_{beat}
-40
ADC
-40
"0"
DELAY
-80
24 MHz
DAC
f^{X}_{refl}
EOM
TMSX
ETMX

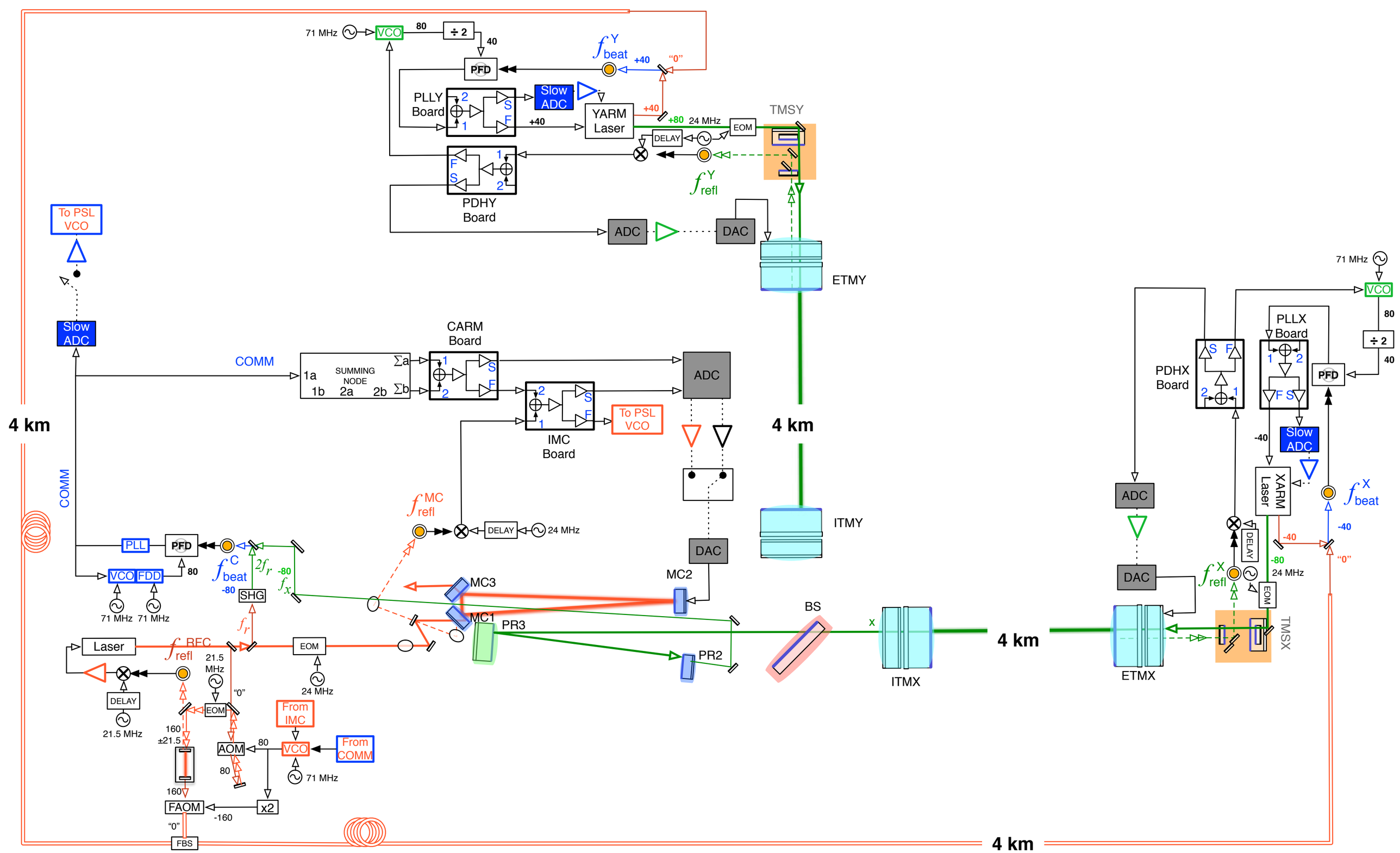
71 MHz
VCO
80
÷ 2
40
PFD
f^{Y}_{beat}
+40
"0"
PLLY Board
Slow ADC
YARM Laser
+40
+80
24 MHz
EOM
TMSY
DELAY
PDHY Board
f^{Y}_{refl}
ADC
DAC
ETMY
To PSL VCO
Slow ADC
COMM
CARM Board
1a
1b
SUMMING NODE
2a
2b
Σa
Σb
ADC
IMC Board
To PSL VCO
4 km
4 km
ITMY
DAC
f^{MC}_{refl}
DELAY
24 MHz
MC2
MC3
MC1
PR3
PR2
BS
ITMX
4 km
ETMX
PDHX Board
PLLX Board
PFD
Slow ADC
XARM Laser
f^{X}_{beat}
-40
"0"
f^{X}_{refl}
EOM
TMSX
PLL
PFD
VCO
FDD
80
71 MHz
71 MHz
f^{C}_{beat}
-80
SHG
$2f_r$
-80
f_x
f_r
Laser
f^{BFC}_{refl}
21.5 MHz
"0"
EOM
24 MHz
DELAY
21.5 MHz
160
±21.5
EOM
From IMC
AOM
80
VCO
From COMM
71 MHz
160
FAOM
-160
x2
"0"
FBS
4 km

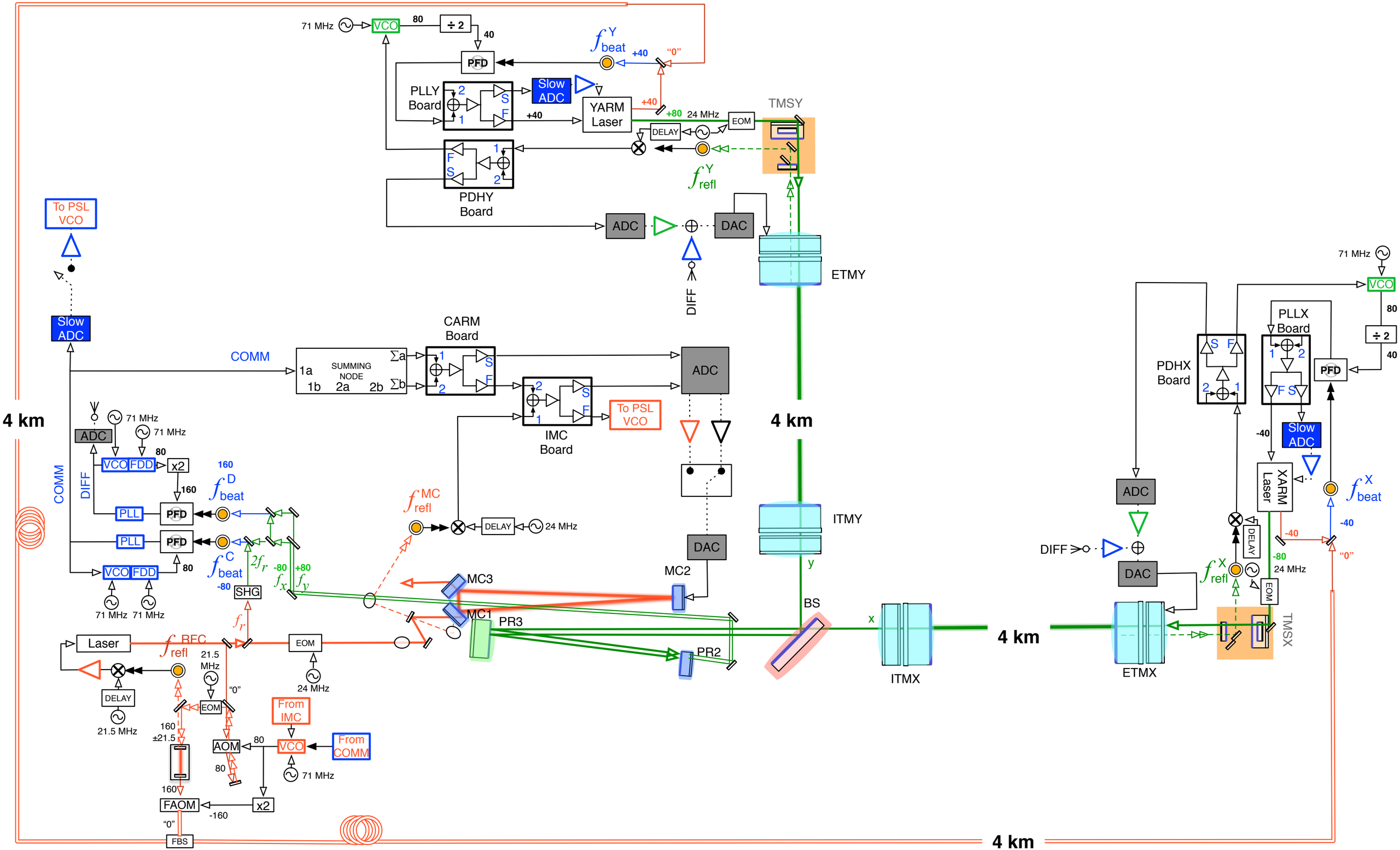
71 MHz
VCO
80
÷ 2
40
PFD
f^{Y}_{beat}
+40
"0"
PLLY Board
Slow ADC
YARM Laser
+40
+80
24 MHz
EOM
TMSY
DELAY
PDHY Board
f^{Y}_{refl}
ADC
DAC
ETMY
DIFF
To PSL VCO
Slow ADC
COMM
CARM Board
1a
1b
SUMMING NODE
2a
2b
Σa
Σb
ADC
IMC Board
To PSL VCO
4 km
4 km
71 MHz
ADC
71 MHz
VCO
FDD
x2
160
f^{D}_{beat}
PLL
PFD
PLL
PFD
VCO
FDD
f^{C}_{beat}
-80
SHG
71 MHz
71 MHz
f^{MC}_{refl}
DELAY
24 MHz
DAC
MC2
ITMY
y
BS
x
ITMX
4 km
MC3
MC1
PR3
PR2
Laser
f^{BFC}_{refl}
21.5 MHz
EOM
24 MHz
DELAY
21.5 MHz
EOM
"0"
From IMC
From COMM
AOM
VCO
71 MHz
FAOM
x2
-160
"0"
FBS
4 km
71 MHz
VCO
80
÷ 2
40
PDHX Board
PLLX Board
PFD
-40
Slow ADC
XARM Laser
f^{X}_{beat}
-40
ADC
DIFF
DAC
DELAY
-40
-80
24 MHz
f^{X}_{refl}
EOM
"0"
ETMX
TMSX

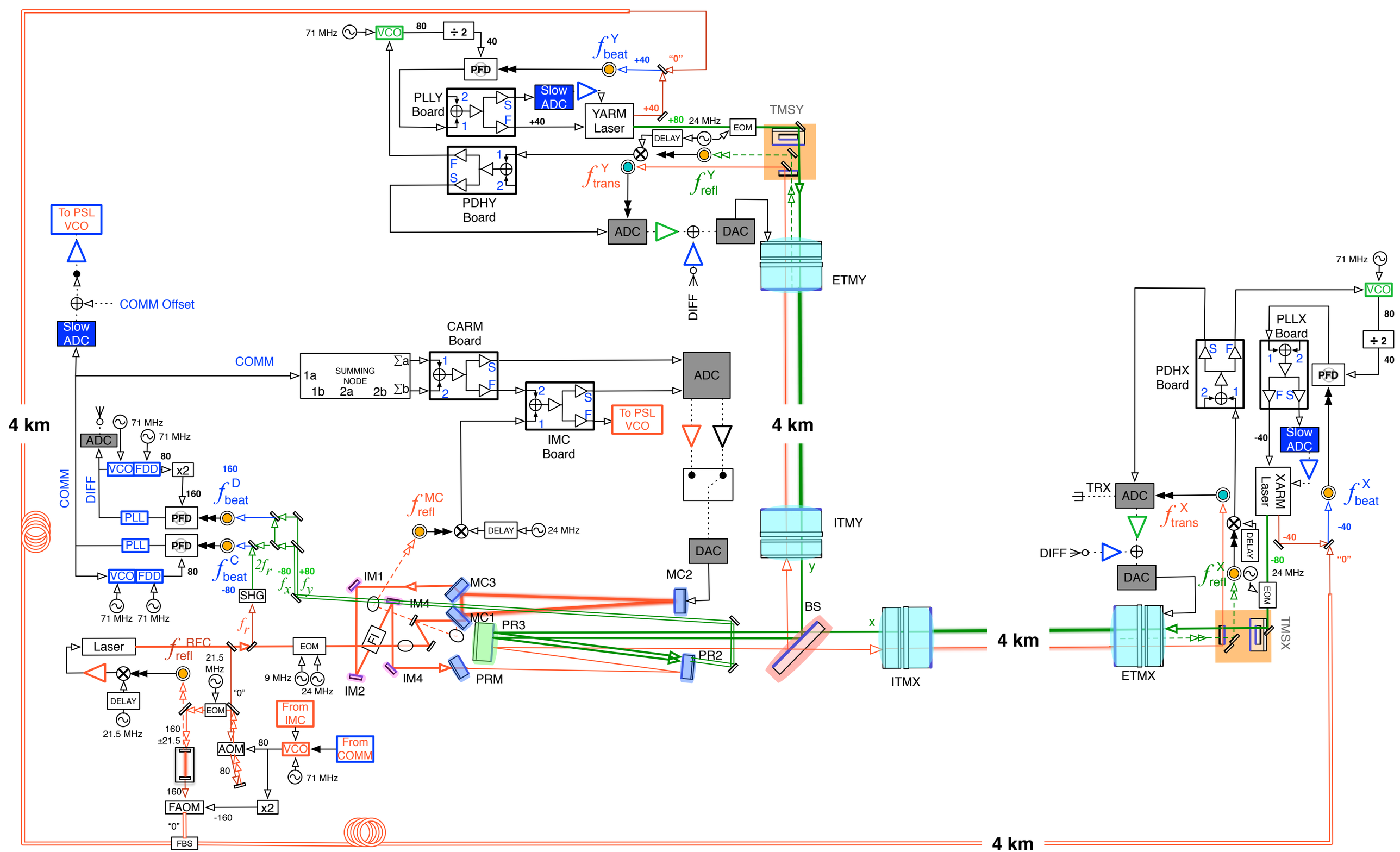
71 MHz
VCO
80
÷ 2
40
PFD
f^{Y}_{beat}
+40
"0"
PLLY Board
Slow ADC
YARM Laser
+40
+80
24 MHz
EOM
TMSY
DELAY
PDHY Board
f^{Y}_{trans}
f^{Y}_{refl}
ADC
DAC
DIFF
ETMY
To PSL VCO
COMM Offset
Slow ADC
CARM Board
COMM
1a
1b
SUMMING NODE
2a
2b
Σa
Σb
ADC
IMC Board
To PSL VCO
4 km
71 MHz
ADC
71 MHz
VCO
FDD
x2
160
f^{D}_{beat}
PLL
PFD
PLL
PFD
VCO
FDD
80
f^{C}_{beat}
-80
SHG
$2f_r$
f_x
f_y
71 MHz
71 MHz
f^{MC}_{refl}
DELAY
24 MHz
IM1
MC3
IM4
MC1
PR3
PR2
PRM
IM2
IM4
FI
MC2
DAC
ITMY
BS
x
y
ITMX
4 km
Laser
f^{BFC}_{refl}
21.5 MHz
EOM
9 MHz
24 MHz
DELAY
21.5 MHz
EOM
"0"
From IMC
160
±21.5
AOM
80
VCO
From COMM
71 MHz
160
FAOM
x2
-160
"0"
FBS
4 km
71 MHz
VCO
80
÷ 2
40
PDHX Board
PLLX Board
PFD
-40
Slow ADC
XARM Laser
f^{X}_{beat}
-40
TRX
ADC
f^{X}_{trans}
DIFF
DAC
DELAY
-40
-80
24 MHz
"0"
f^{X}_{refl}
EOM
TMSX
ETMX

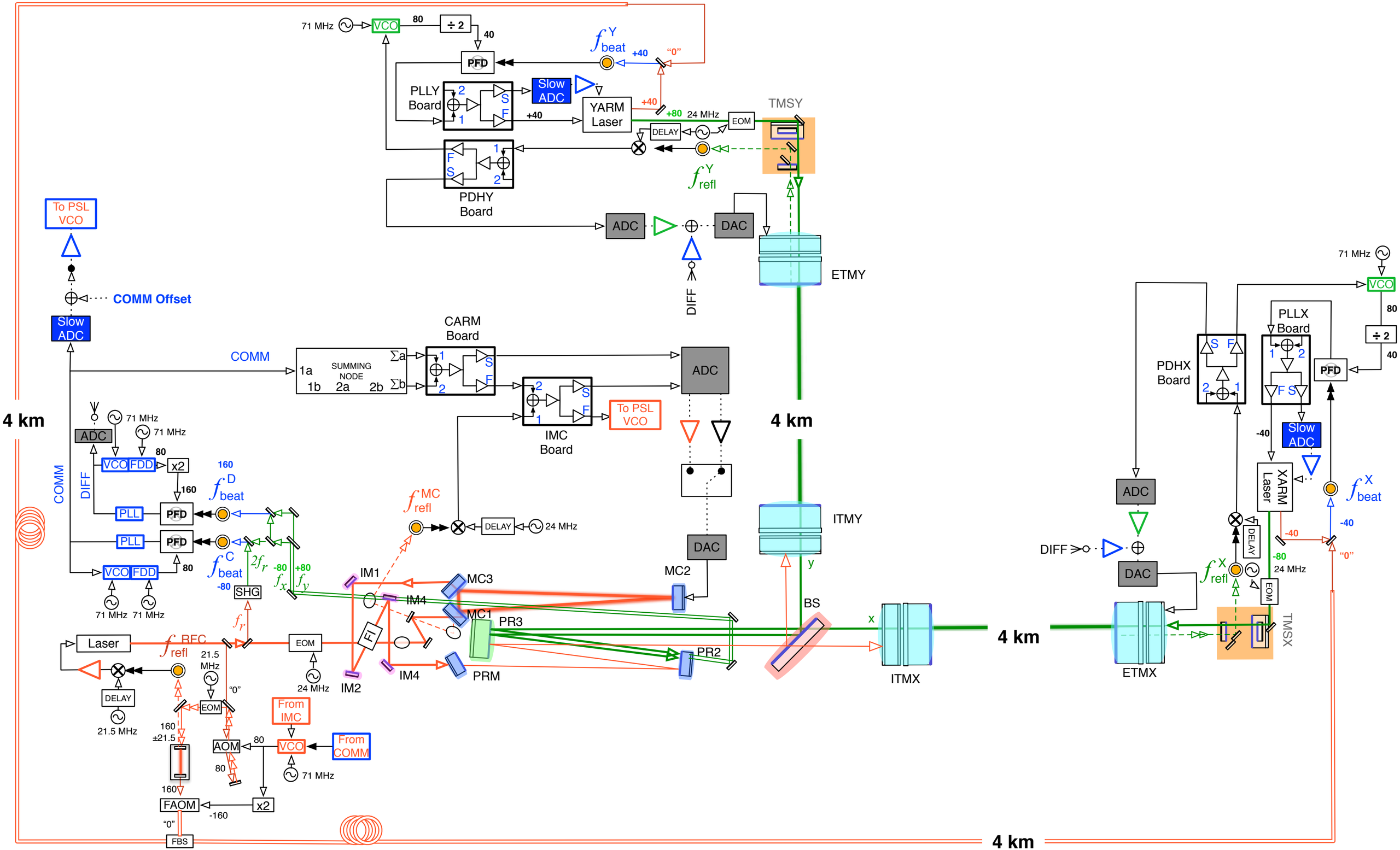
71 MHz
VCO
80
÷ 2
40
PFD
f^{Y}_{beat}
+40
"0"
PLLY Board
Slow ADC
YARM Laser
+40
+80
24 MHz
EOM
TMSY
DELAY
PDHY Board
f^{Y}_{refl}
ADC
DAC
ETMY
DIFF
To PSL VCO
COMM Offset
Slow ADC
CARM Board
COMM
1a
1b
SUMMING NODE
2a
2b
Σa
Σb
ADC
IMC Board
To PSL VCO
4 km
4 km
ADC
71 MHz
71 MHz
VCO
FDD
x2
160
160
f^{D}_{beat}
PLL
PFD
PLL
PFD
VCO
FDD
80
f^{C}_{beat}
-80
SHG
$2f_r$
-80
+80
f_x
f_y
71 MHz
71 MHz
COMM
DIFF
f^{MC}_{refl}
DELAY
24 MHz
DAC
MC2
ITMY
y
BS
x
ITMX
4 km
IM1
MC3
IM4
MC1
PR3
PR2
PRM
IM4
IM2
FI
f_r
Laser
f^{BFC}_{refl}
21.5 MHz
EOM
24 MHz
DELAY
21.5 MHz
"0"
EOM
From IMC
160
±21.5
AOM
80
80
VCO
From COMM
71 MHz
160
FAOM
-160
x2
"0"
FBS
4 km
71 MHz
VCO
80
÷ 2
40
PLLX Board
PDHX Board
PFD
-40
Slow ADC
XARM Laser
ADC
f^{X}_{beat}
-40
DIFF
DELAY
-40
"0"
DAC
f^{X}_{refl}
-80
24 MHz
EOM
TMSX
ETMX

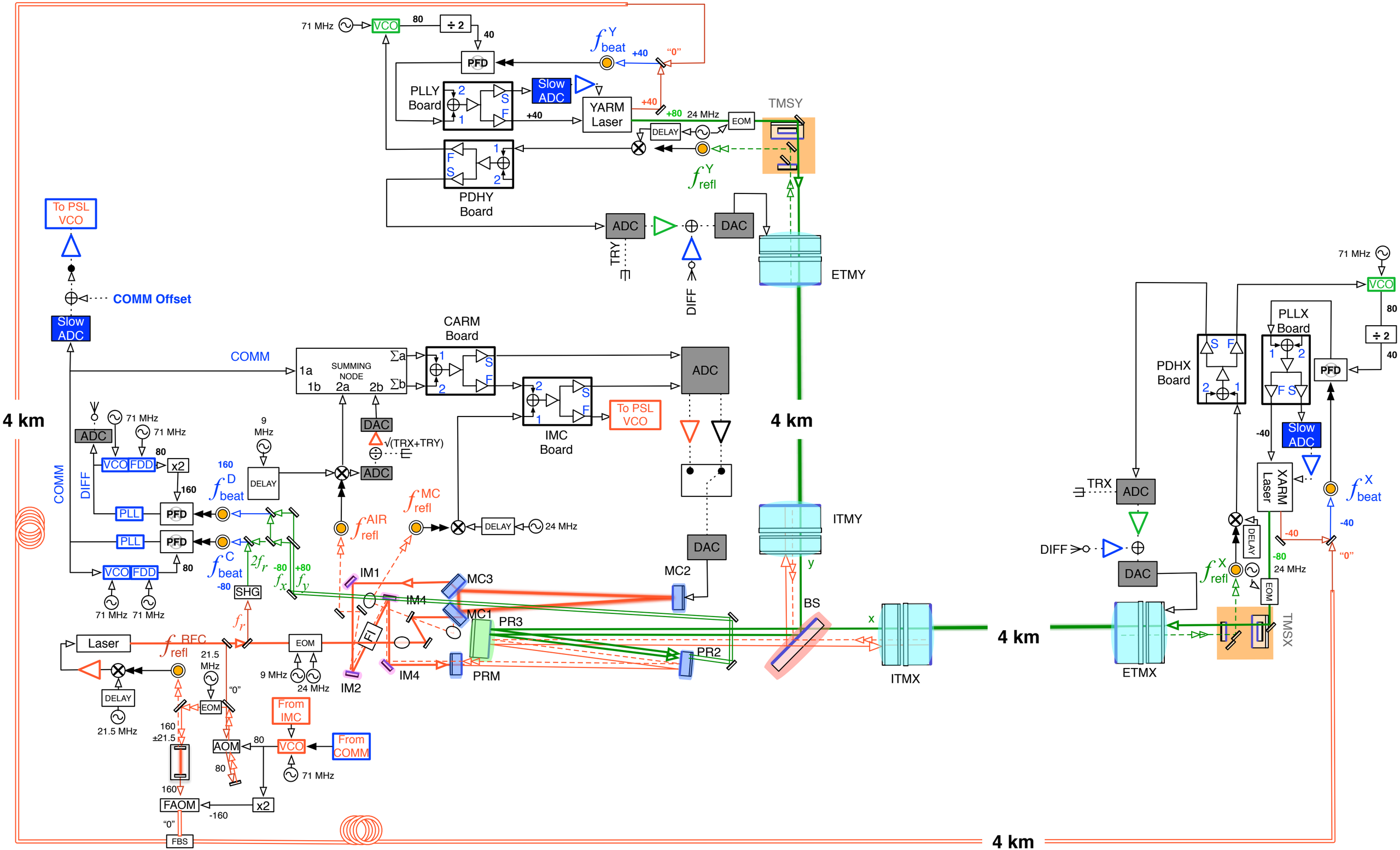
71 MHz
VCO
80
÷ 2
40
PFD
f^{Y}_{beat}
+40
"0"
PLLY Board
Slow ADC
YARM Laser
+40
+80
24 MHz
EOM
TMSY
DELAY
PDHY Board
f^{Y}_{refl}
ADC
DAC
TRY
DIFF
ETMY
To PSL VCO
COMM Offset
Slow ADC
CARM Board
COMM
1a
1b
SUMMING NODE
2a
2b
Σa
Σb
ADC
4 km
71 MHz
ADC
71 MHz
VCO
FDD
x2
160
9 MHz
DAC
√(TRX+TRY)
ADC
IMC Board
To PSL VCO
4 km
COMM
DIFF
DELAY
f^{D}_{beat}
PLL
PFD
f^{MC}_{refl}
f^{AIR}_{refl}
DELAY
24 MHz
ITMY
PLL
PFD
f^{C}_{beat}
$2f_r$
-80
+80
f_x
f_y
DAC
MC2
y
VCO
FDD
80
SHG
IM1
MC3
IM4
MC1
BS
71 MHz
71 MHz
f_r
PR3
x
Laser
f_{refl}
21.5 MHz
EOM
9 MHz
24 MHz
FI
PR2
4 km
IM4
PRM
ITMX
DELAY
21.5 MHz
"0"
EOM
IM2
From IMC
160
±21.5
AOM
80
VCO
From COMM
80
71 MHz
160
FAOM
x2
-160
"0"
FBS
4 km
71 MHz
VCO
80
PLLX Board
÷ 2
40
PDHX Board
PFD
-40
Slow ADC
TRX
ADC
XARM Laser
f^{X}_{beat}
DIFF
DELAY
-40
-40
"0"
DAC
f^{X}_{refl}
-80
24 MHz
EOM
TMSX
ETMX

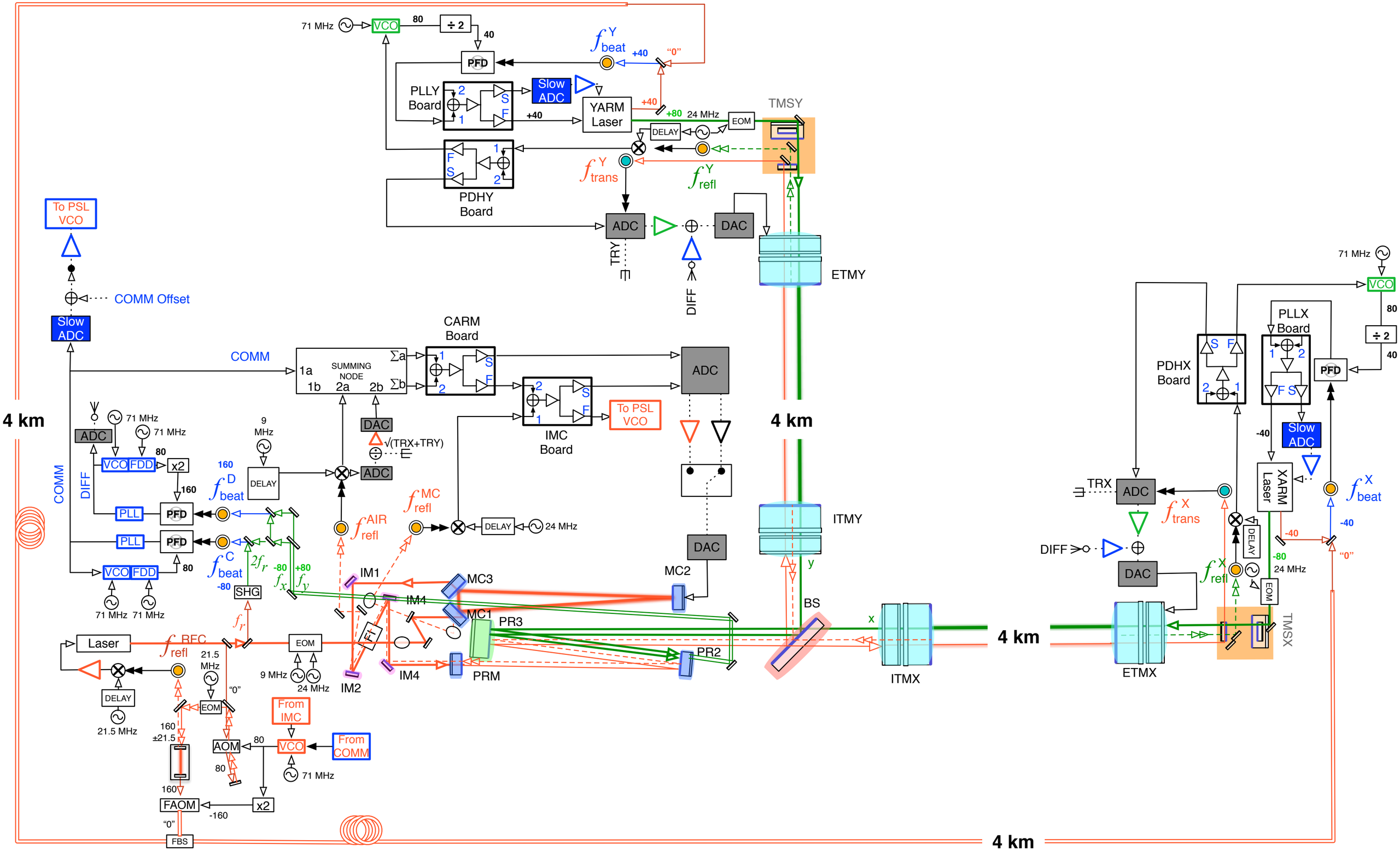
71 MHz
VCO
80
÷ 2
40
PFD
f^{Y}_{beat}
+40
"0"
PLLY Board
Slow ADC
YARM Laser
+40
+80
24 MHz
EOM
TMSY
DELAY
f^{Y}_{trans}
f^{Y}_{refl}
PDHY Board
ADC
DAC
TRY
DIFF
ETMY
To PSL VCO
COMM Offset
Slow ADC
CARM Board
COMM
1a
1b
SUMMING NODE
2a
2b
Σa
Σb
ADC
4 km
71 MHz
71 MHz
ADC
VCO
FDD
x2
80
160
9 MHz
DAC
√(TRX+TRY)
ADC
DELAY
f^{D}_{beat}
IMC Board
To PSL VCO
4 km
COMM
DIFF
PLL
PFD
f^{MC}_{refl}
f^{AIR}_{refl}
DELAY
24 MHz
PLL
PFD
f^{C}_{beat}
$2f_r$
-80
+80
f_x
f_y
VCO
FDD
80
71 MHz
71 MHz
SHG
IM1
MC3
IM4
MC1
PR3
MC2
DAC
ITMY
y
BS
x
ITMX
Laser
f_r
f^{RFC}_{refl}
21.5 MHz
EOM
9 MHz
24 MHz
IM2
IM4
PRM
PR2
4 km
DELAY
21.5 MHz
"0"
EOM
From IMC
160
±21.5
AOM
80
VCO
From COMM
80
71 MHz
160
FAOM
x2
-160
"0"
FBS
4 km
71 MHz
VCO
80
÷ 2
40
PLLX Board
PDHX Board
PFD
-40
Slow ADC
XARM Laser
f^{X}_{beat}
-40
TRX
ADC
f^{X}_{trans}
DIFF
DAC
DELAY
-40
-80
24 MHz
"0"
f^{X}_{refl}
EOM
TMSX
ETMX

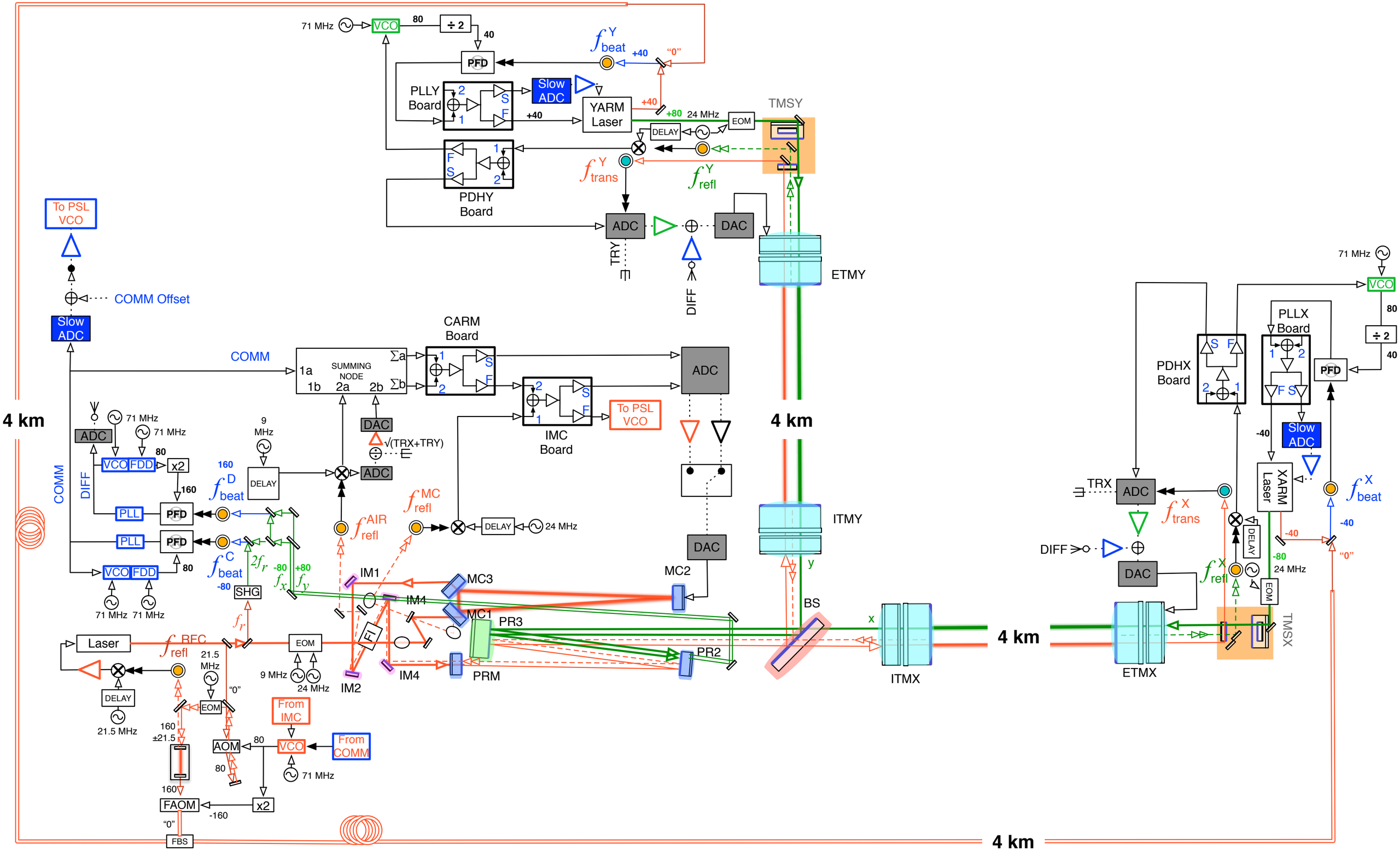
71 MHz
VCO
80
÷ 2
40
PFD
f^{Y}_{beat}
+40
"0"
PLLY Board
Slow ADC
YARM Laser
+40
+80
24 MHz
EOM
TMSY
DELAY
PDHY Board
f^{Y}_{trans}
f^{Y}_{refl}
ADC
DAC
TRY
DIFF
ETMY
To PSL VCO
COMM Offset
Slow ADC
CARM Board
COMM
1a
1b
SUMMING NODE
2a
2b
Σa
Σb
ADC
4 km
71 MHz
ADC
71 MHz
VCO
FDD
x2
80
160
DIFF
COMM
9 MHz
DAC
√(TRX+TRY)
ADC
DELAY
f^{D}_{beat}
IMC Board
To PSL VCO
f^{MC}_{refl}
f^{AIR}_{refl}
DELAY
24 MHz
PLL
PFD
PLL
PFD
VCO
FDD
80
71 MHz
71 MHz
f^{C}_{beat}
$2f_r$
-80
+80
f_x
f_y
SHG
IM1
MC3
IM4
MC1
PR3
FI
IM2
IM4
PRM
PR2
MC2
DAC
ITMY
BS
x
y
ITMX
4 km
Laser
f^{RFC}_{refl}
21.5 MHz
EOM
9 MHz
24 MHz
DELAY
21.5 MHz
EOM
"0"
160
±21.5
AOM
80
80
From IMC
VCO
From COMM
71 MHz
160
FAOM
x2
-160
"0"
FBS
4 km
71 MHz
VCO
80
÷ 2
40
PDHX Board
PLLX Board
PFD
-40
Slow ADC
XARM Laser
f^{X}_{beat}
-40
TRX
ADC
f^{X}_{trans}
DIFF
DAC
DELAY
-40
-80
24 MHz
"0"
f^{X}_{refl}
EOM
TMSX
ETMX

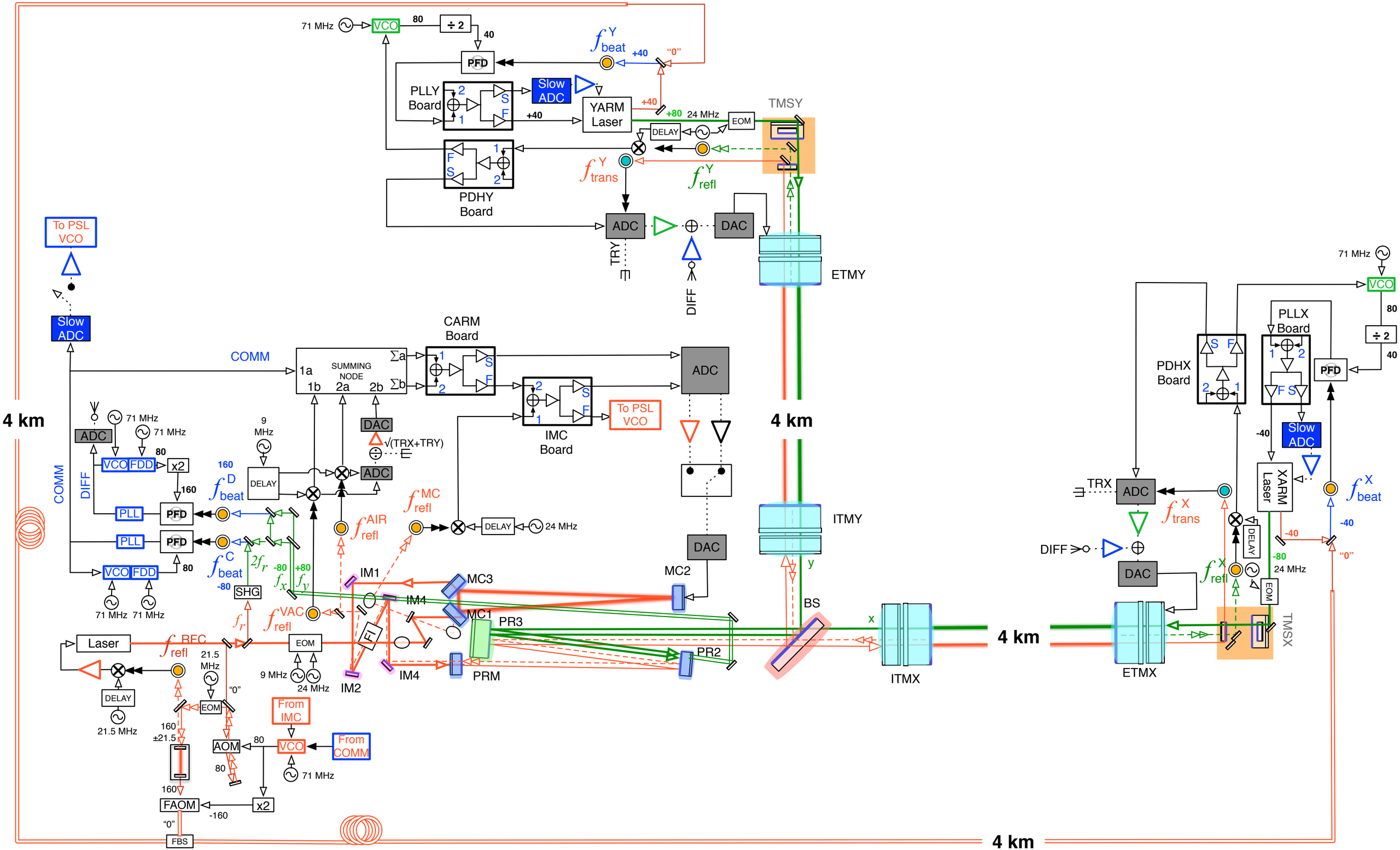
71 MHz
VCO
80
÷ 2
40
PFD
f^{Y}_{beat}
+40
"0"
PLLY Board
Slow ADC
YARM Laser
+40
+80
24 MHz
EOM
TMSY
DELAY
PDHY Board
f^{Y}_{trans}
f^{Y}_{refl}
ADC
DAC
TRY
DIFF
ETMY
To PSL VCO
Slow ADC
CARM Board
COMM
1a
1b
SUMMING NODE
2a
2b
Σa
Σb
ADC
4 km
71 MHz
71 MHz
ADC
VCO
FDD
x2
80
160
DIFF
COMM
9 MHz
DELAY
f^{D}_{beat}
DAC
√(TRX+TRY)
ADC
IMC Board
To PSL VCO
4 km
PLL
PFD
f^{AIR}_{refl}
f^{MC}_{refl}
DELAY
24 MHz
ITMY
PLL
PFD
f^{C}_{beat}
$2f_r$
-80
+80
f_x
f_y
SHG
IM1
MC3
MC2
DAC
VCO
FDD
80
71 MHz
71 MHz
IM4
MC1
PR3
BS
y
x
f_r
f^{VAC}_{refl}
Laser
f^{RFC}_{refl}
21.5 MHz
EOM
FI
PR2
4 km
9 MHz
24 MHz
IM2
IM4
PRM
ITMX
ETMX
DELAY
21.5 MHz
"0"
EOM
From IMC
160
±21.5
AOM
80
VCO
From COMM
80
71 MHz
160
FAOM
x2
-160
"0"
FBS
4 km
71 MHz
VCO
80
÷ 2
40
PLLX Board
PDHX Board
PFD
-40
Slow ADC
XARM Laser
f^{X}_{beat}
TRX
ADC
f^{X}_{trans}
DIFF
DELAY
-40
-40
"0"
DAC
-80
24 MHz
f^{X}_{refl}
EOM
TMSX