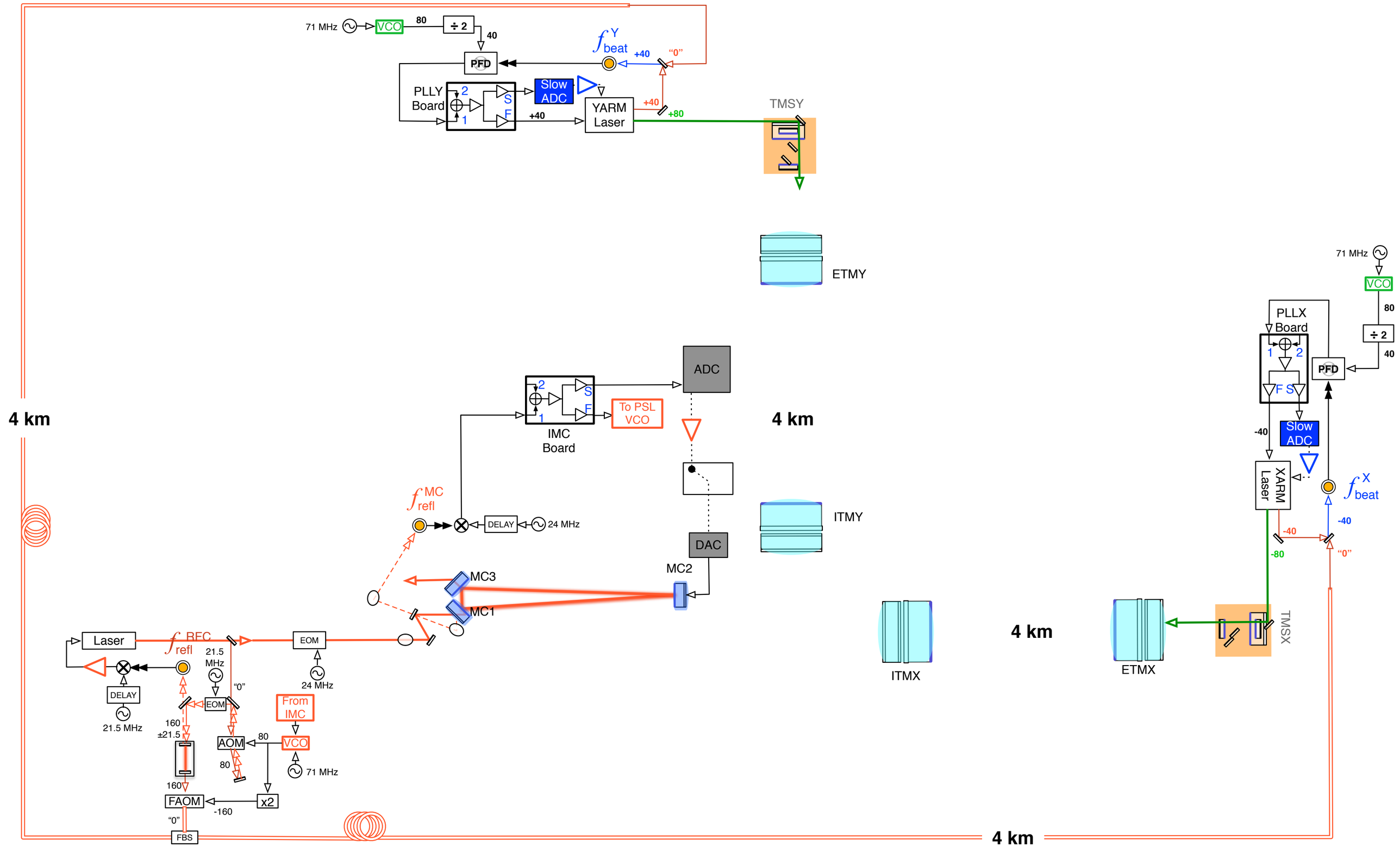
71 MHz
VCO
80
÷ 2
40
PFD
f_{beat}^{Y}
+40
"0"
PLLY Board
2
1
S
F
Slow ADC
+40
YARM Laser
+40
+80
TMSY
ETMY
4 km
ADC
2
1
S
F
To PSL VCO
IMC Board
4 km
f_{refl}^{MC}
DELAY
24 MHz
DAC
ITMY
MC2
MC3
MC1
Laser
f_{refl}^{BFC}
21.5 MHz
EOM
24 MHz
DELAY
21.5 MHz
"0"
EOM
From IMC
160
±21.5
AOM
80
80
VCO
71 MHz
160
FAOM
-160
x2
"0"
FBS
ITMX
4 km
ETMX
TMSX
71 MHz
VCO
80
PLLX Board
1
2
÷ 2
40
PFD
F S
-40
Slow ADC
XARM Laser
f_{beat}^{X}
-40
-40
-80
"0"
4 km