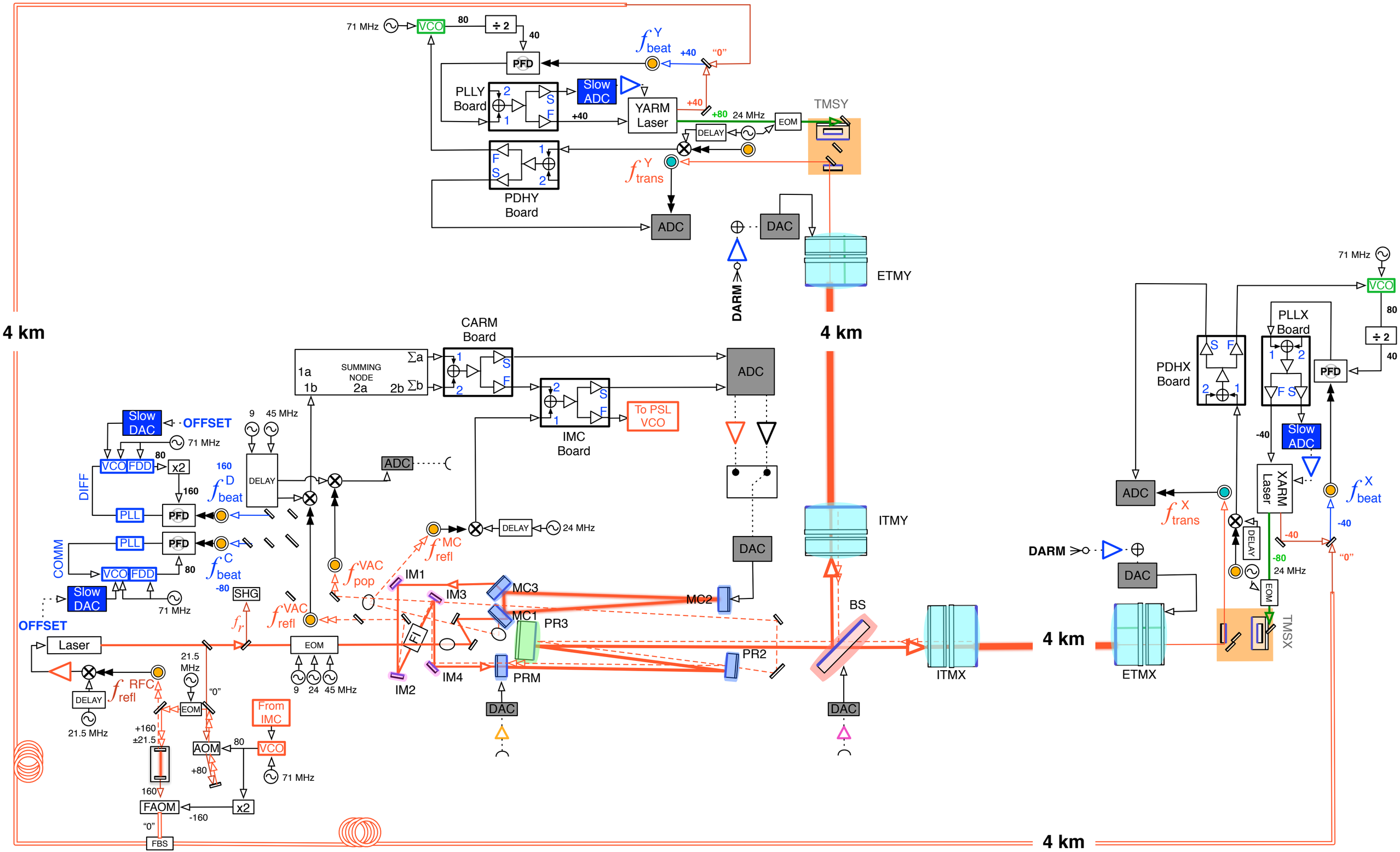
71 MHz
VCO
80
÷ 2
40
PFD
f^{Y}_{beat}
+40
"0"
PLLY Board
Slow ADC
YARM Laser
+40
+80
24 MHz
EOM
TMSY
DELAY
f^{Y}_{trans}
PDHY Board
ADC
DAC
DARM
ETMY
4 km
CARM Board
1a
1b
SUMMING NODE
2a
2b
Σa
Σb
ADC
IMC Board
To PSL VCO
Slow DAC
OFFSET
71 MHz
9
45 MHz
VCO
FDD
x2
160
DIFF
f^{D}_{beat}
DELAY
PLL
PFD
COMM
f^{C}_{beat}
-80
SHG
f_r
f^{VAC}_{refl}
f^{VAC}_{pop}
f^{MC}_{refl}
24 MHz
IM1
IM2
IM3
IM4
MC1
MC2
MC3
PR3
PR2
PRM
FI
EOM
9
24
45 MHz
Laser
21.5 MHz
f^{RFC}_{refl}
"0"
+160
±21.5
AOM
+80
From IMC
FAOM
-160
FBS
ITMY
BS
ITMX
ETMX
PDHX Board
PLLX Board
XARM Laser
f^{X}_{trans}
f^{X}_{beat}
-40
-80
TMSX