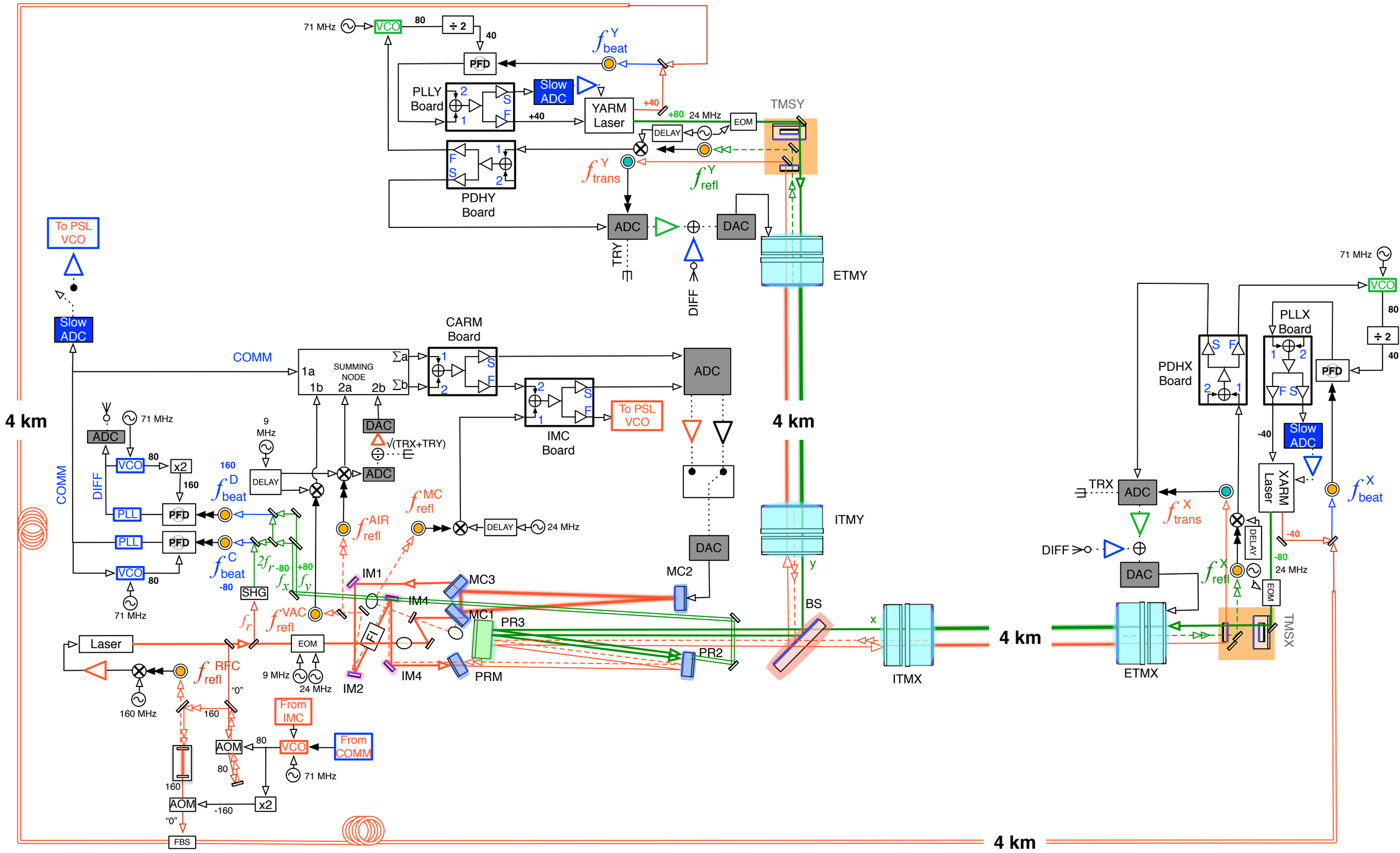
71 MHz
VCO
80
÷ 2
40
PFD
f^{Y}_{beat}
PLLY Board
Slow ADC
YARM Laser
+40
+80
24 MHz
EOM
TMSY
DELAY
PDHY Board
f^{Y}_{trans}
f^{Y}_{refl}
ADC
DAC
TRY
DIFF
ETMY
To PSL VCO
Slow ADC
CARM Board
COMM
SUMMING NODE
1a
1b
2a
2b
Σa
Σb
IMC Board
To PSL VCO
ADC
4 km
4 km
71 MHz
ADC
VCO
x2
160
9 MHz
DELAY
DAC
√(TRX+TRY)
ADC
f^{D}_{beat}
f^{MC}_{refl}
f^{AIR}_{refl}
DELAY
24 MHz
PLL
PFD
PLL
PFD
VCO
f^{C}_{beat}
SHG
$2f_r$
-80
+80
f_x
f_y
71 MHz
IM1
MC3
IM4
MC1
PR3
f^{VAC}_{refl}
Laser
EOM
FI
PR2
PRM
IM4
IM2
9 MHz
24 MHz
f^{RFC}_{refl}
160 MHz
"0"
From IMC
AOM
VCO
From COMM
71 MHz
AOM
-160
x2
"0"
FBS
DAC
MC2
ITMY
BS
ITMX
4 km
4 km
71 MHz
VCO
80
÷ 2
40
PLLX Board
PDHX Board
PFD
Slow ADC
-40
XARM Laser
f^{X}_{beat}
TRX
ADC
f^{X}_{trans}
DIFF
DAC
DELAY
-40
-80
24 MHz
f^{X}_{refl}
EOM
TMSX
ETMX

A