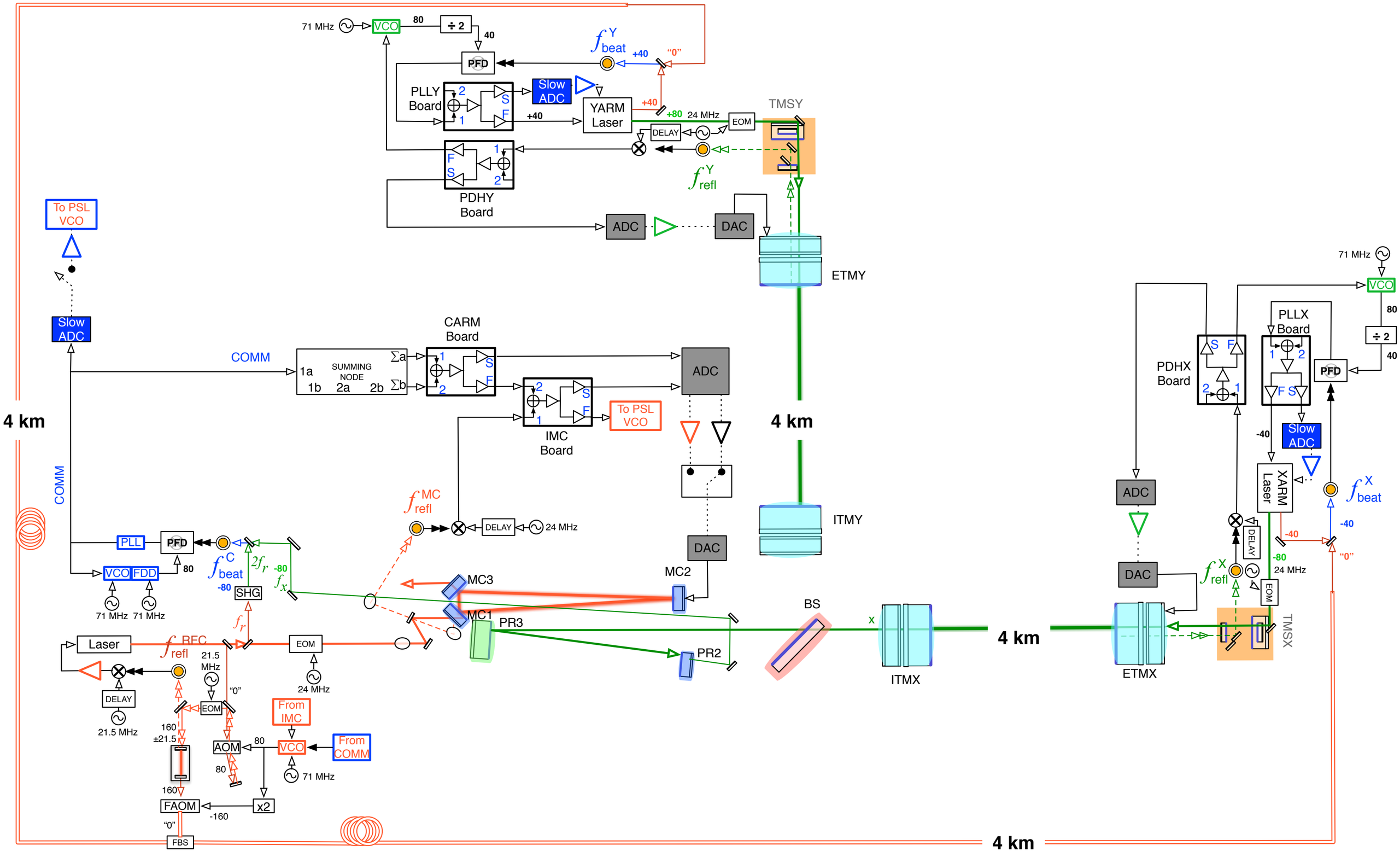
71 MHz
VCO
80
÷ 2
40
PFD
f^{Y}_{beat}
+40
"0"
PLLY Board
Slow ADC
YARM Laser
+40
+80
24 MHz
EOM
TMSY
DELAY
PDHY Board
f^{Y}_{refl}
ADC
DAC
ETMY
To PSL VCO
Slow ADC
COMM
SUMMING NODE
1a
1b
2a
2b
Σa
Σb
CARM Board
ADC
IMC Board
To PSL VCO
4 km
4 km
ITMY
DAC
f^{MC}_{refl}
DELAY
24 MHz
MC2
MC3
MC1
PR3
PR2
BS
ITMX
4 km
ETMX
PDHX Board
PLLX Board
PFD
Slow ADC
XARM Laser
f^{X}_{beat}
-40
"0"
f^{X}_{refl}
-80
24 MHz
EOM
TMSX
PLL
PFD
VCO
FDD
80
71 MHz
71 MHz
f^{C}_{beat}
-80
SHG
$2f_r$
-80
f_x
f_r
Laser
f^{BFC}_{refl}
21.5 MHz
"0"
EOM
24 MHz
DELAY
21.5 MHz
160
±21.5
EOM
From IMC
AOM
80
80
VCO
From COMM
71 MHz
160
FAOM
-160
x2
"0"
FBS
4 km