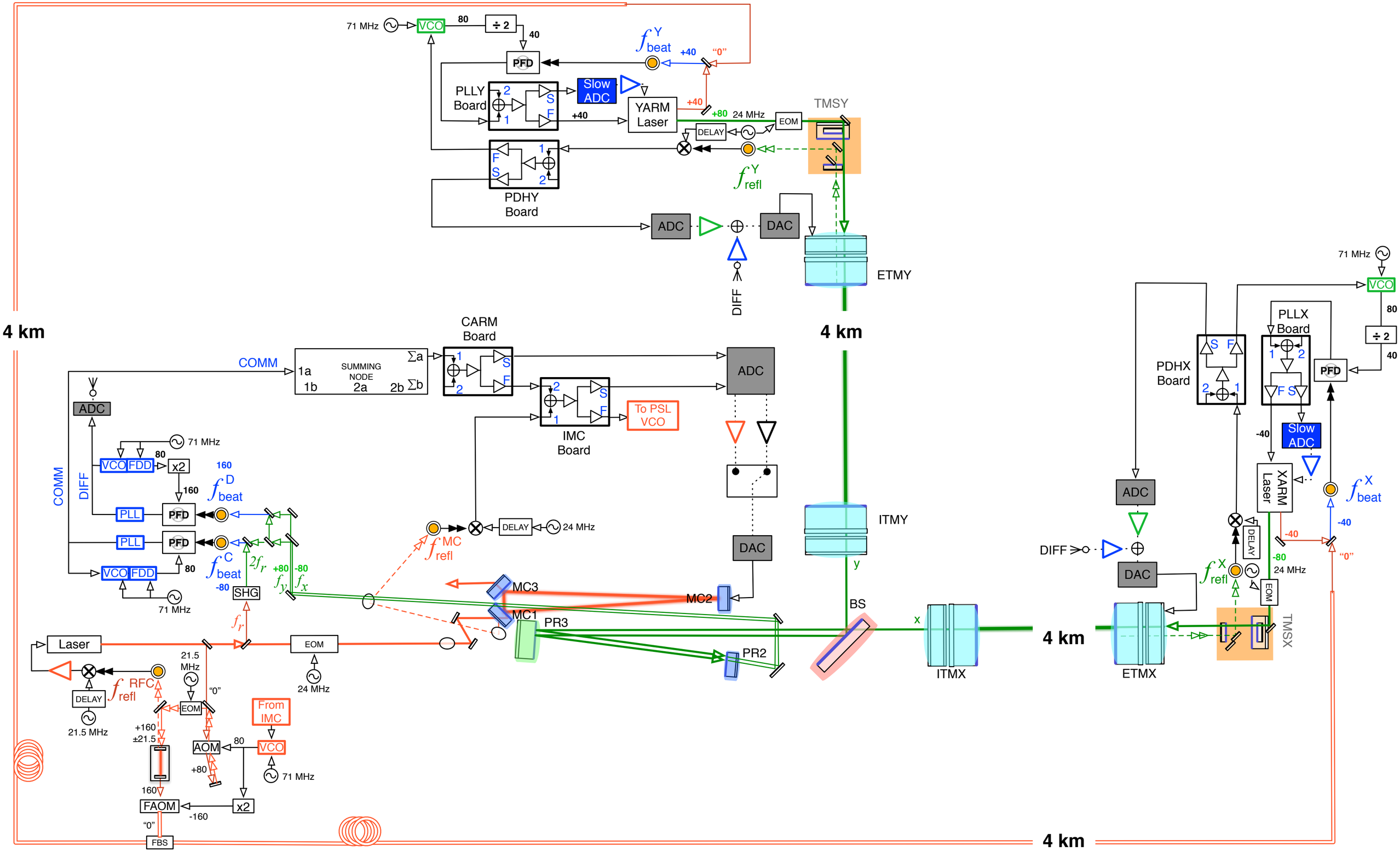
71 MHz
VCO
80
÷ 2
40
PFD
f^{Y}_{beat}
+40
"0"
PLLY Board
Slow ADC
YARM Laser
+40
+80
24 MHz
EOM
TMSY
DELAY
PDHY Board
f^{Y}_{refl}
ADC
DAC
DIFF
ETMY
4 km
4 km
CARM Board
COMM
SUMMING NODE
1a
1b
2a
2b
Σa
Σb
ADC
IMC Board
To PSL VCO
71 MHz
VCO
FDD
x2
160
f^{D}_{beat}
PLL
PFD
f^{C}_{beat}
-80
SHG
$2f_r$
+80
-80
f_y
f_x
f^{MC}_{refl}
DELAY
24 MHz
MC3
MC2
MC1
PR3
PR2
BS
ITMY
ITMX
4 km
Laser
EOM
24 MHz
21.5 MHz
f^{RFC}_{refl}
DELAY
21.5 MHz
+160
±21.5
AOM
From IMC
VCO
71 MHz
FAOM
-160
x2
FBS
4 km
PDHX Board
PLLX Board
PFD
Slow ADC
XARM Laser
f^{X}_{beat}
-40
f^{X}_{refl}
-80
24 MHz
"0"
TMSX
ETMX