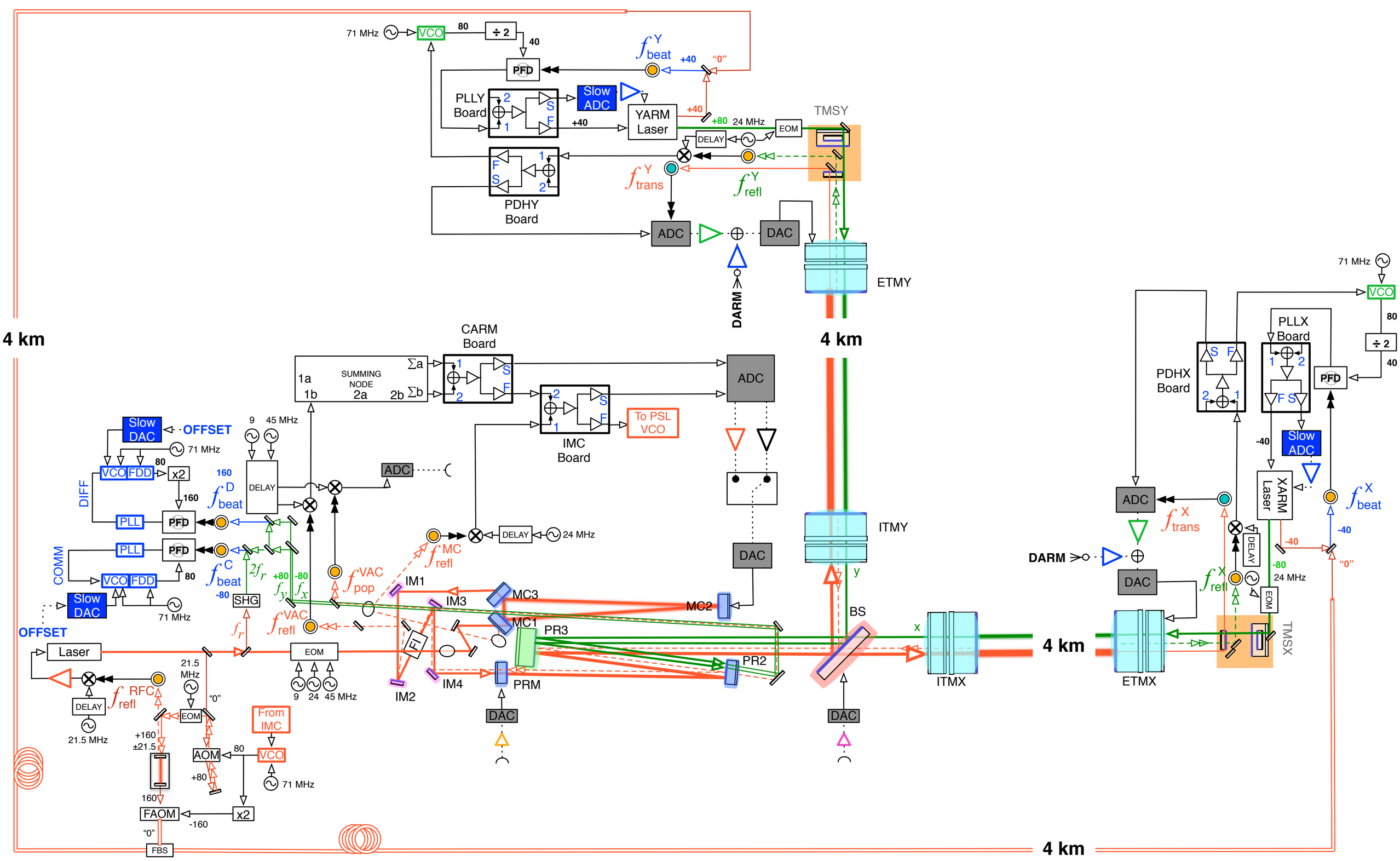

71 MHz
VCO
80
÷ 2
40
PFD
f^{Y}_{beat}
+40
"0"
PLLY Board
Slow ADC
YARM Laser
+40
+80
24 MHz
EOM
TMSY
DELAY
PDHY Board
f^{Y}_{trans}
f^{Y}_{refl}
ADC
DAC
DARM
ETMY
4 km
CARM Board
SUMMING NODE
1a
1b
2a
2b
Σa
Σb
IMC Board
To PSL VCO
ADC
DAC
ITMY
Slow DAC
OFFSET
71 MHz
VCO
FDD
x2
DIFF
PLL
PFD
COMM
Slow DAC
OFFSET
Laser
DELAY
21.5 MHz
f^{RFC}_{refl}
EOM
AOM
FAOM
FBS
From IMC
VCO
71 MHz
x2
9
45 MHz
DELAY
ADC
f^{D}_{beat}
f^{C}_{beat}
SHG
f_r
$2f_r$
f_y
f_x
f^{VAC}_{pop}
f^{VAC}_{refl}
f^{MC}_{refl}
IM1
IM2
IM3
IM4
MC1
MC2
MC3
PR2
PR3
PRM
FI
BS
ITMX
ETMX
DAC
PDHX Board
PLLX Board
XARM Laser
f^{X}_{trans}
f^{X}_{refl}
f^{X}_{beat}
TMSX