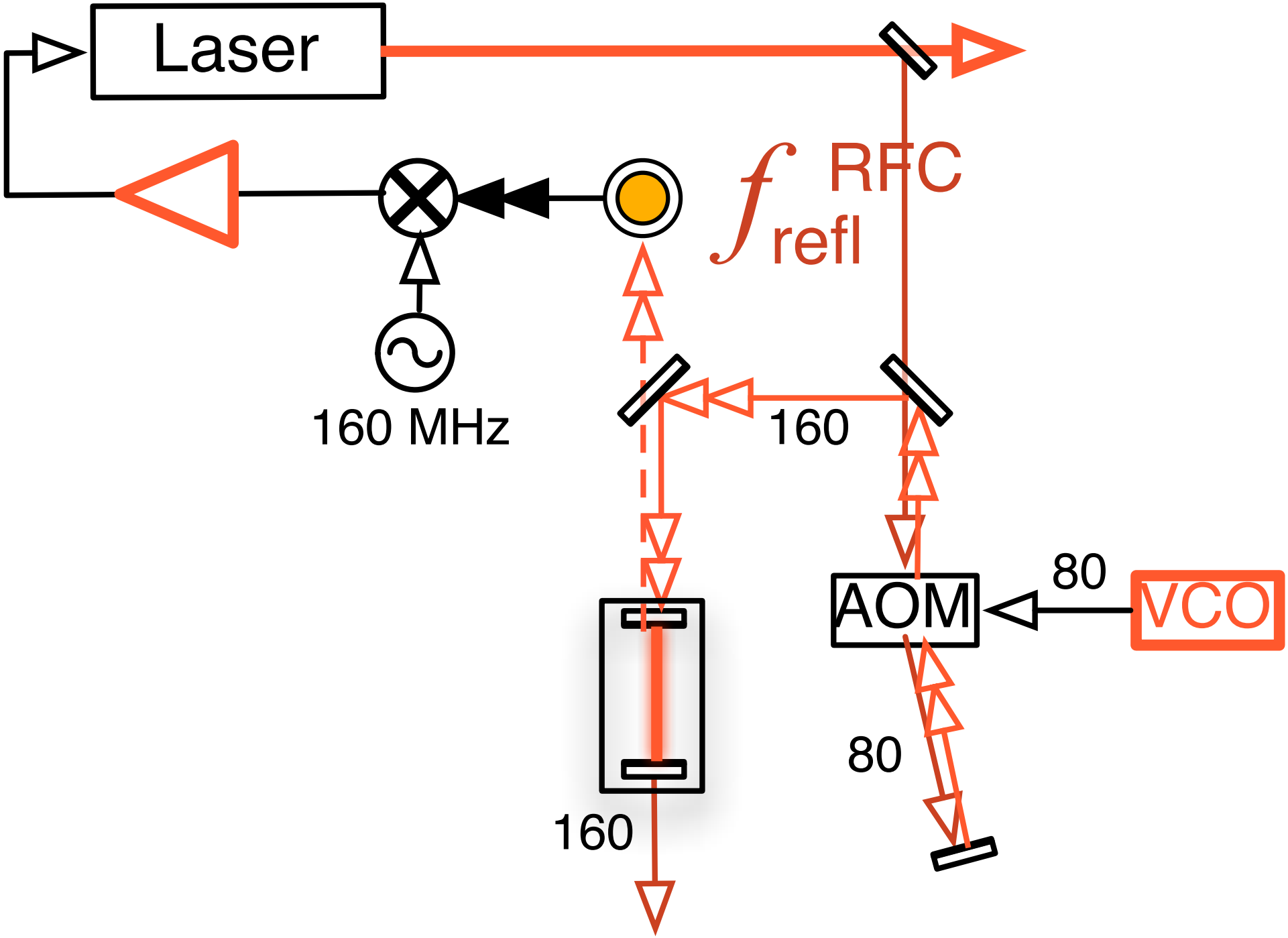
Laser
RFC
f_{refl}
160 MHz
160
AOM
80
VCO
80
160