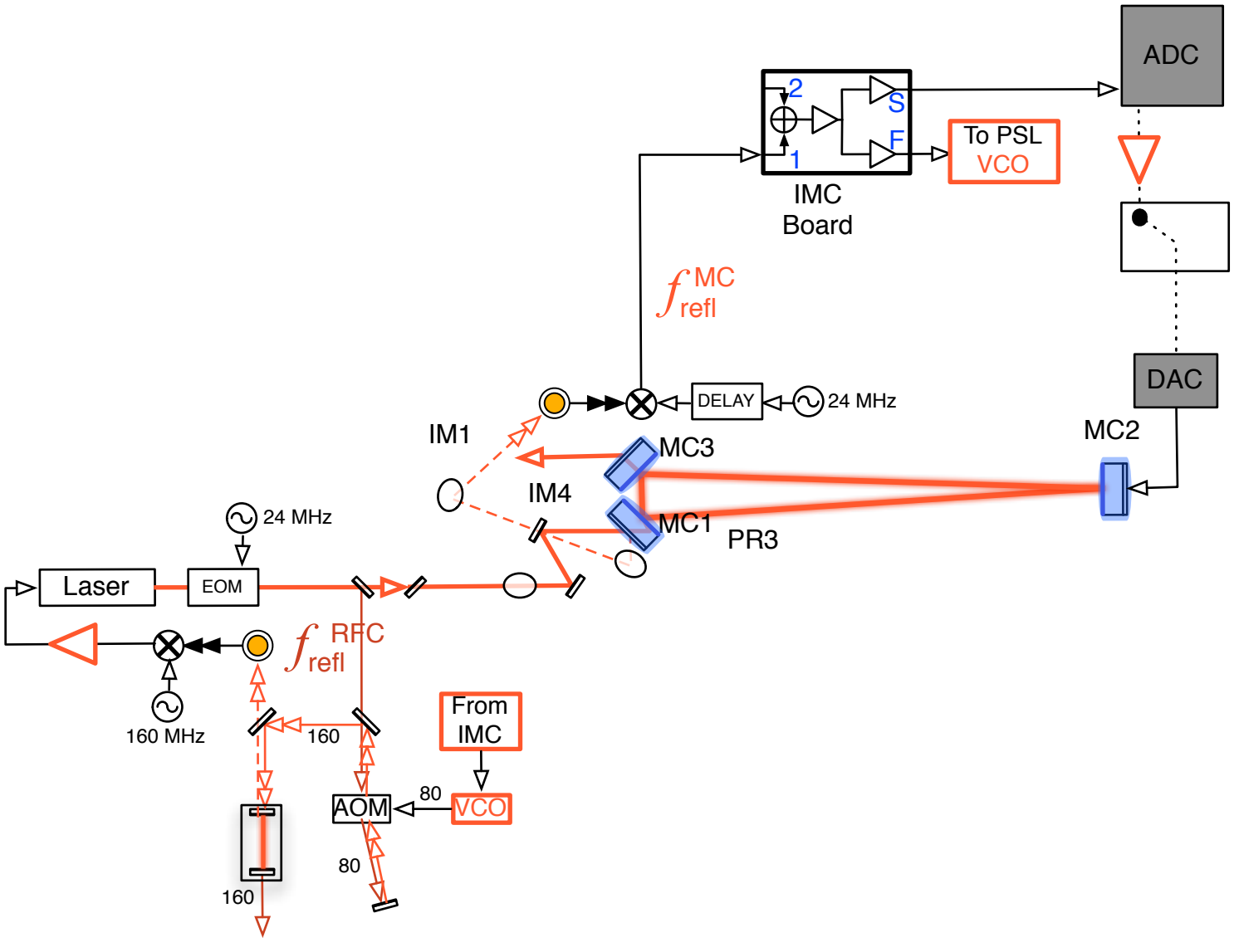
ADC
2
S
F
1
To PSL
VCO
IMC
Board
f^{MC}_{refl}
DAC
DELAY
24 MHz
IM1
MC3
MC2
IM4
MC1
PR3
24 MHz
Laser
EOM
f^{RFC}_{refl}
160 MHz
160
From
IMC
AOM
80
VCO
80
160