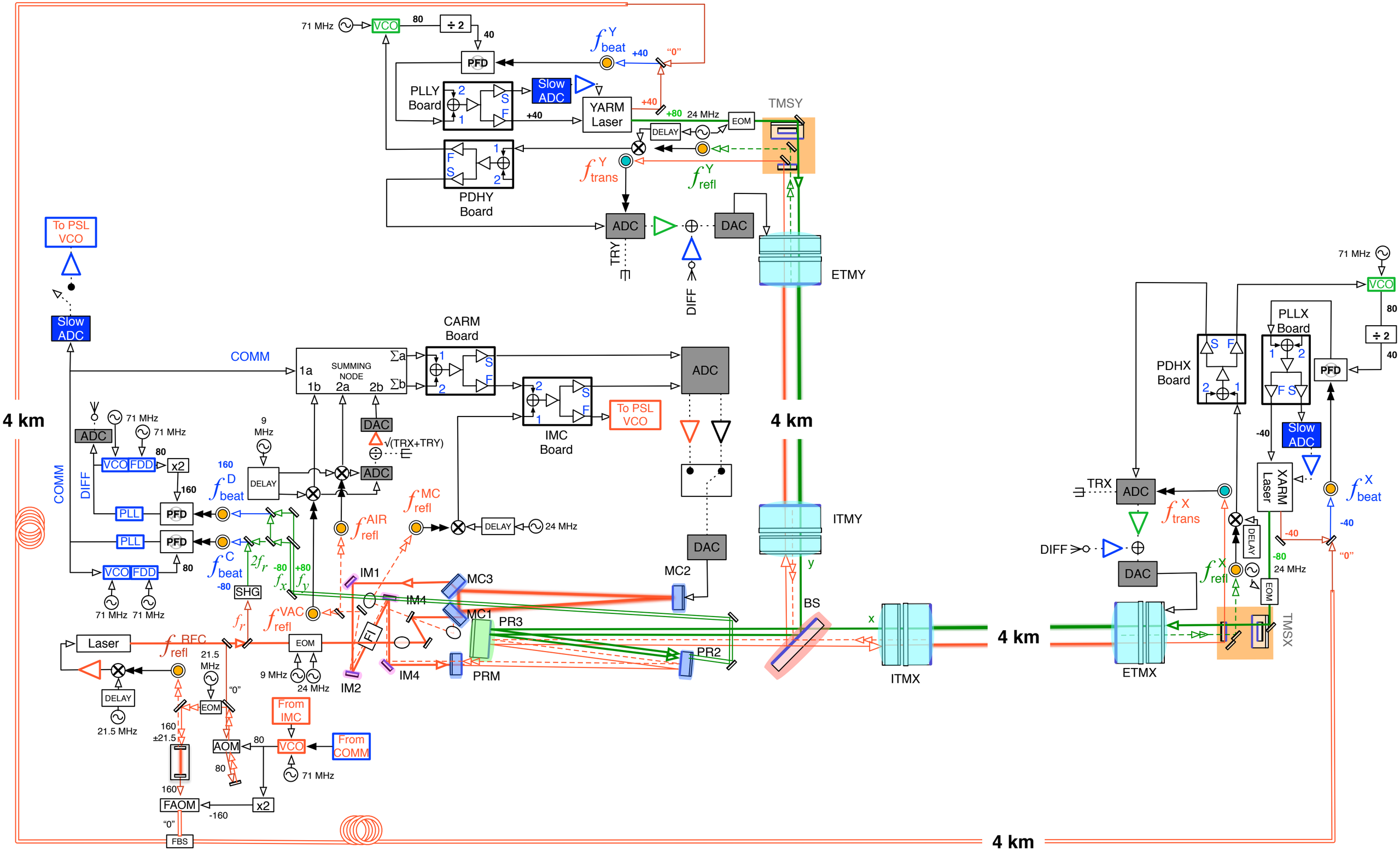
71 MHz
VCO
80
÷ 2
40
PFD
f^{Y}_{beat}
+40
"0"
PLLY Board
Slow ADC
YARM Laser
+40
+80
24 MHz
EOM
TMSY
DELAY
PDHY Board
f^{Y}_{trans}
f^{Y}_{refl}
ADC
DAC
TRY
DIFF
ETMY
To PSL VCO
Slow ADC
CARM Board
COMM
1a
1b
SUMMING NODE
2a
2b
Σa
Σb
ADC
4 km
71 MHz
ADC
71 MHz
80
VCO
FDD
x2
160
9 MHz
DAC
√(TRX+TRY)
ADC
IMC Board
To PSL VCO
DIFF
COMM
PLL
PFD
f^{D}_{beat}
DELAY
f^{MC}_{refl}
f^{AIR}_{refl}
DELAY
24 MHz
PLL
PFD
f^{C}_{beat}
$2f_r$
-80
+80
f_x
f_y
SHG
VCO
FDD
80
71 MHz
71 MHz
IM1
MC3
IM4
MC1
PR3
f^{VAC}_{refl}
f_r
Laser
f^{RFC}_{refl}
21.5 MHz
EOM
FI
PR2
9 MHz
24 MHz
IM2
IM4
PRM
DELAY
21.5 MHz
"0"
EOM
From IMC
160
±21.5
AOM
80
VCO
From COMM
80
71 MHz
160
FAOM
x2
-160
"0"
FBS
DAC
MC2
ITMY
y
BS
x
ITMX
4 km
4 km
71 MHz
VCO
80
÷ 2
40
PLLX Board
PDHX Board
PFD
-40
Slow ADC
TRX
ADC
XARM Laser
f^{X}_{beat}
f^{X}_{trans}
DIFF
DELAY
-40
-40
-80
24 MHz
"0"
DAC
f^{X}_{refl}
EOM
TMSX
ETMX