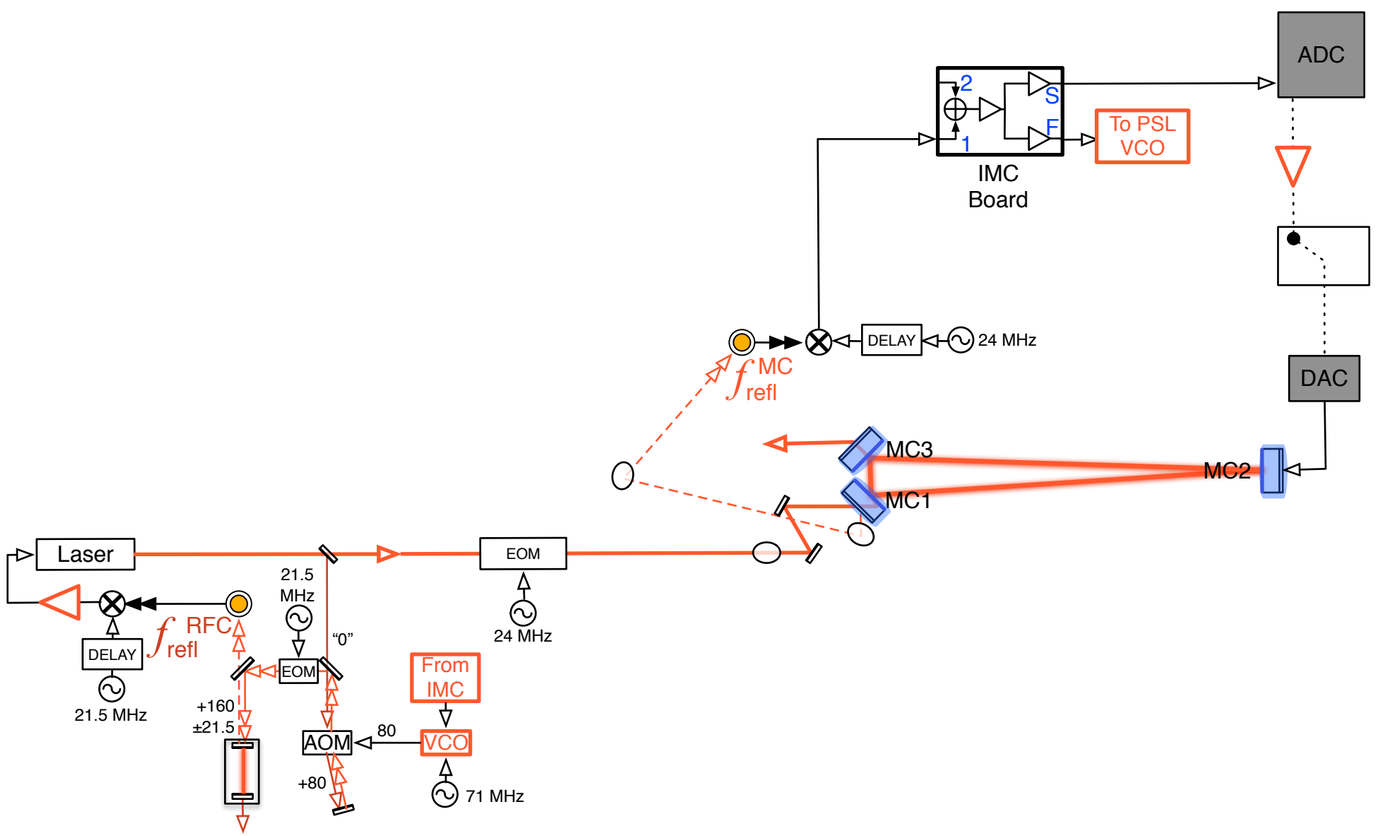
ADC
2
S
F
1
To PSL
VCO
IMC
Board
DELAY
24 MHz
f_{refl}^{MC}
DAC
MC3
MC2
MC1
Laser
EOM
24 MHz
21.5
MHz
"0"
f_{refl}^{RFC}
DELAY
21.5 MHz
EOM
+160
±21.5
AOM
80
+80
From
IMC
VCO
71 MHz