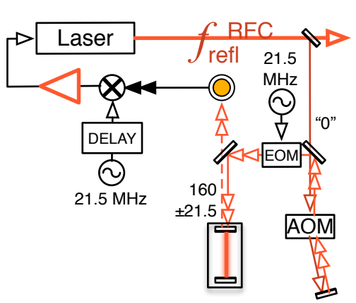
Laser
f_{refl}
RFC
21.5
MHz
"0"
DELAY
21.5 MHz
EOM
160
±21.5
AOM