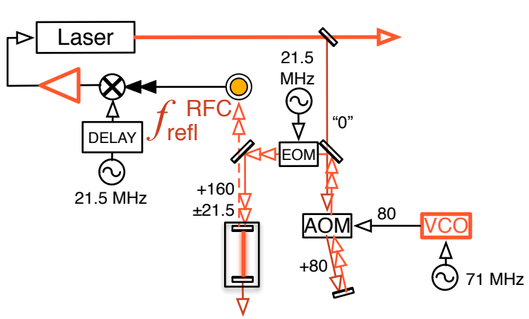
Laser
21.5
MHz
RFC
f_{refl}
DELAY
21.5 MHz
"0"
EOM
+160
±21.5
AOM
80
VCO
+80
71 MHz