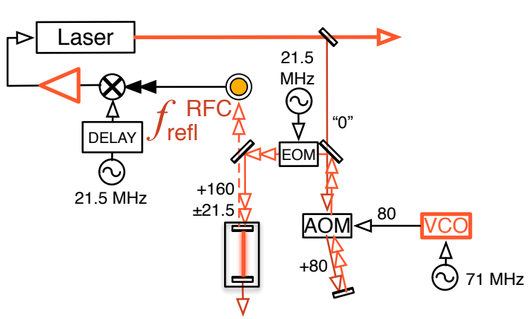
Laser
21.5
MHz
RFC
f_{refl}
DELAY
21.5 MHz
"0"
EOM
+160
±21.5
AOM
80
VCO
+80
71 MHz

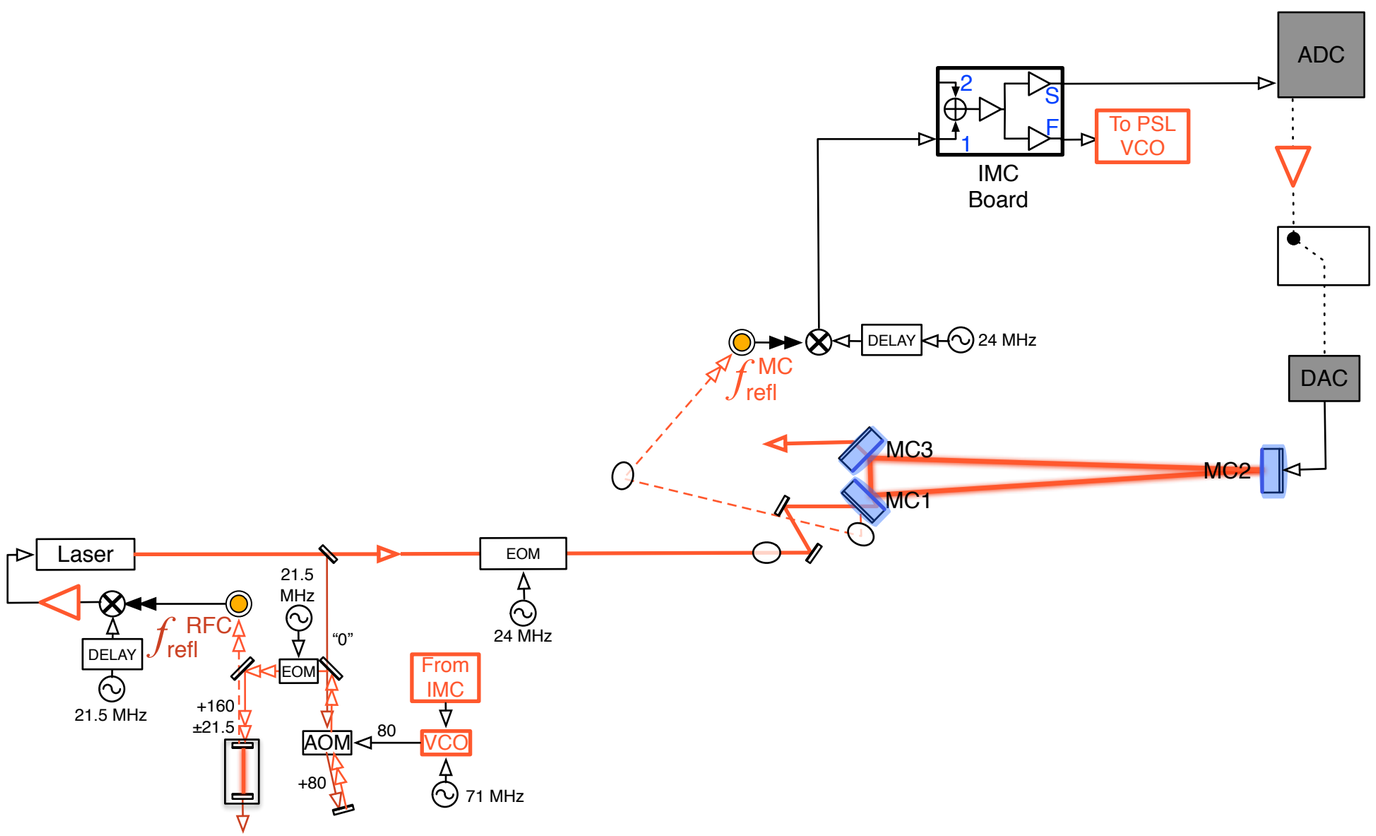
ADC
2
S
F
1
To PSL
VCO
IMC
Board
DELAY
24 MHz
f_{refl}^{MC}
DAC
MC3
MC2
MC1
Laser
EOM
24 MHz
21.5
MHz
"0"
f_{refl}^{RFC}
DELAY
21.5 MHz
EOM
+160
±21.5
AOM
80
+80
From
IMC
VCO
71 MHz

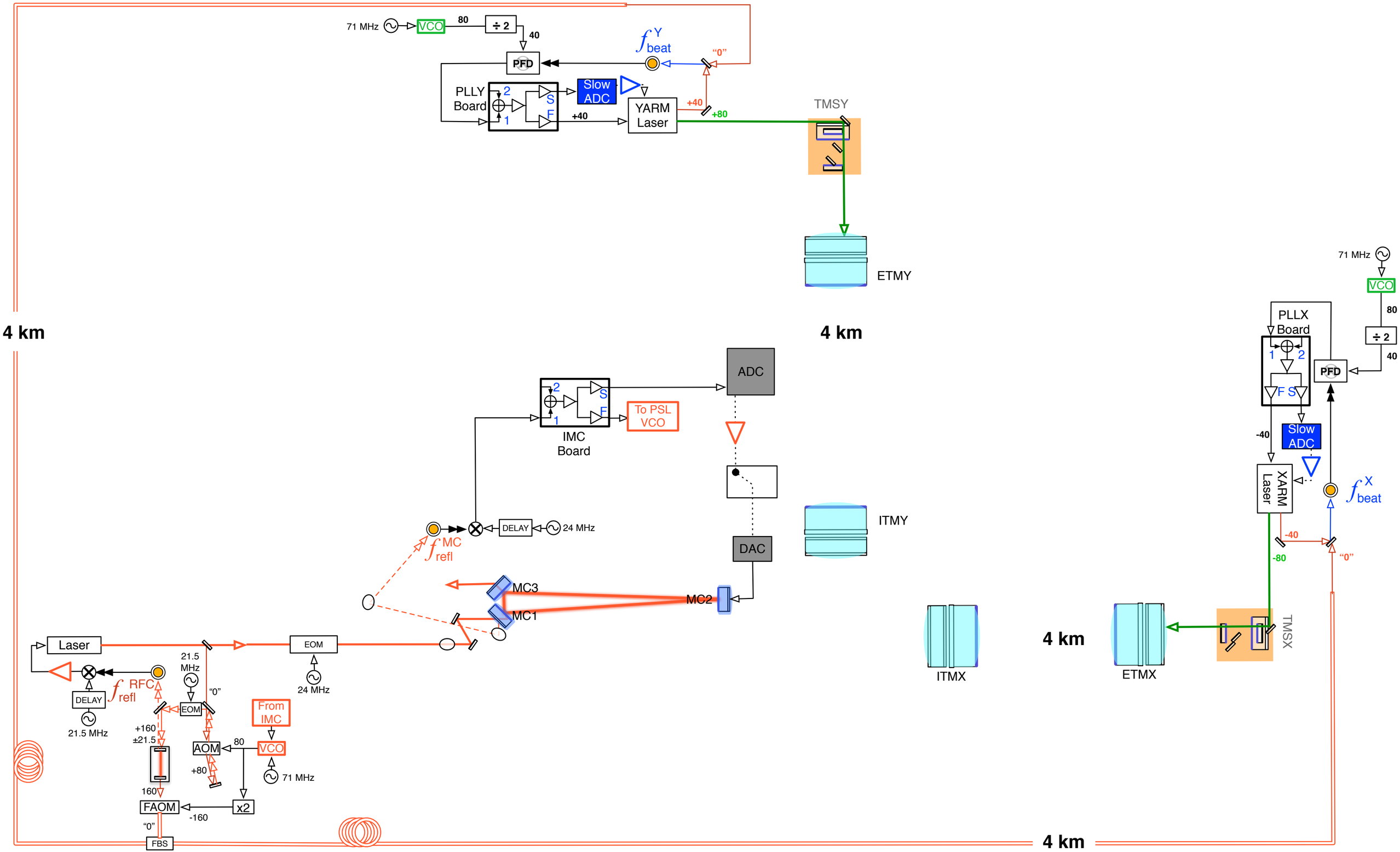
71 MHz
VCO
80
÷ 2
40
PFD
f^{Y}_{beat}
"0"
PLLY Board
2
1
S
F
Slow ADC
+40
YARM Laser
+40
+80
TMSY
ETMY
4 km
4 km
ADC
2
1
S
F
To PSL VCO
IMC Board
DELAY
24 MHz
f^{MC}_{refl}
DAC
ITMY
MC3
MC1
MC2
Laser
EOM
24 MHz
21.5 MHz
"0"
DELAY
21.5 MHz
f^{RFC}_{refl}
EOM
From IMC
+160
±21.5
AOM
80
VCO
+80
71 MHz
160
FAOM
-160
x2
"0"
FBS
ITMX
4 km
ETMX
TMSX
4 km
71 MHz
VCO
80
÷ 2
40
PLLX Board
1
2
F
S
PFD
-40
Slow ADC
XARM Laser
f^{X}_{beat}
-40
-80
"0"

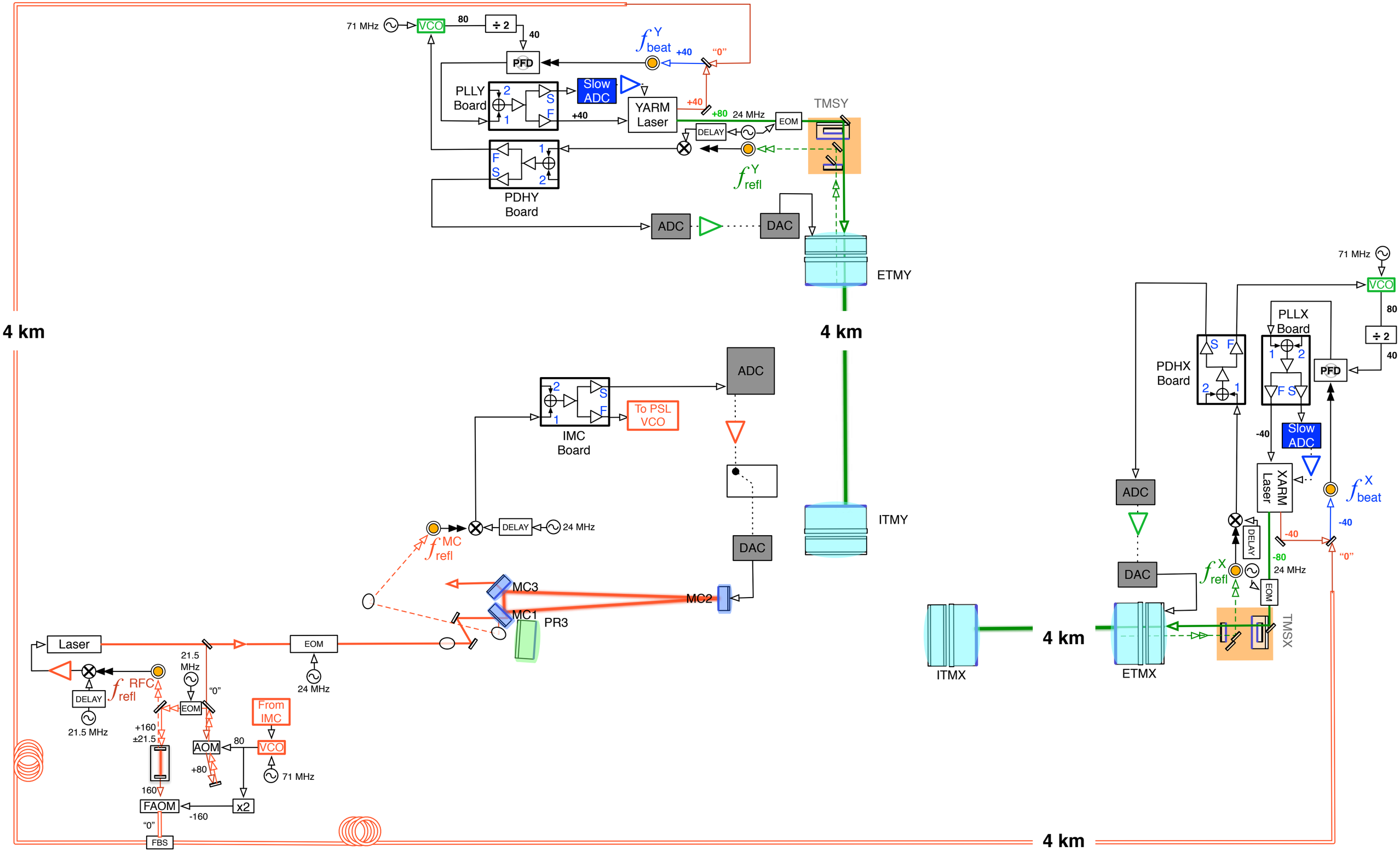
71 MHz
VCO
80
÷ 2
40
PFD
f^{Y}_{beat}
+40
"0"
PLLY Board
Slow ADC
YARM Laser
+40
+80
24 MHz
EOM
TMSY
DELAY
PDHY Board
f^{Y}_{refl}
ADC
DAC
ETMY
4 km
4 km
ADC
IMC Board
To PSL VCO
DELAY
24 MHz
f^{MC}_{refl}
DAC
ITMY
MC3
MC2
MC1
PR3
Laser
EOM
24 MHz
21.5 MHz
"0"
f^{RFC}_{refl}
DELAY
21.5 MHz
EOM
From IMC
+160
±21.5
AOM
80
VCO
+80
71 MHz
160
FAOM
-160
x2
"0"
FBS
4 km
ITMX
ETMX
TMSX
71 MHz
VCO
80
÷ 2
40
PDHX Board
PLLX Board
PFD
-40
Slow ADC
XARM Laser
ADC
DAC
f^{X}_{beat}
-40
-40
"0"
DELAY
-80
24 MHz
f^{X}_{refl}
EOM