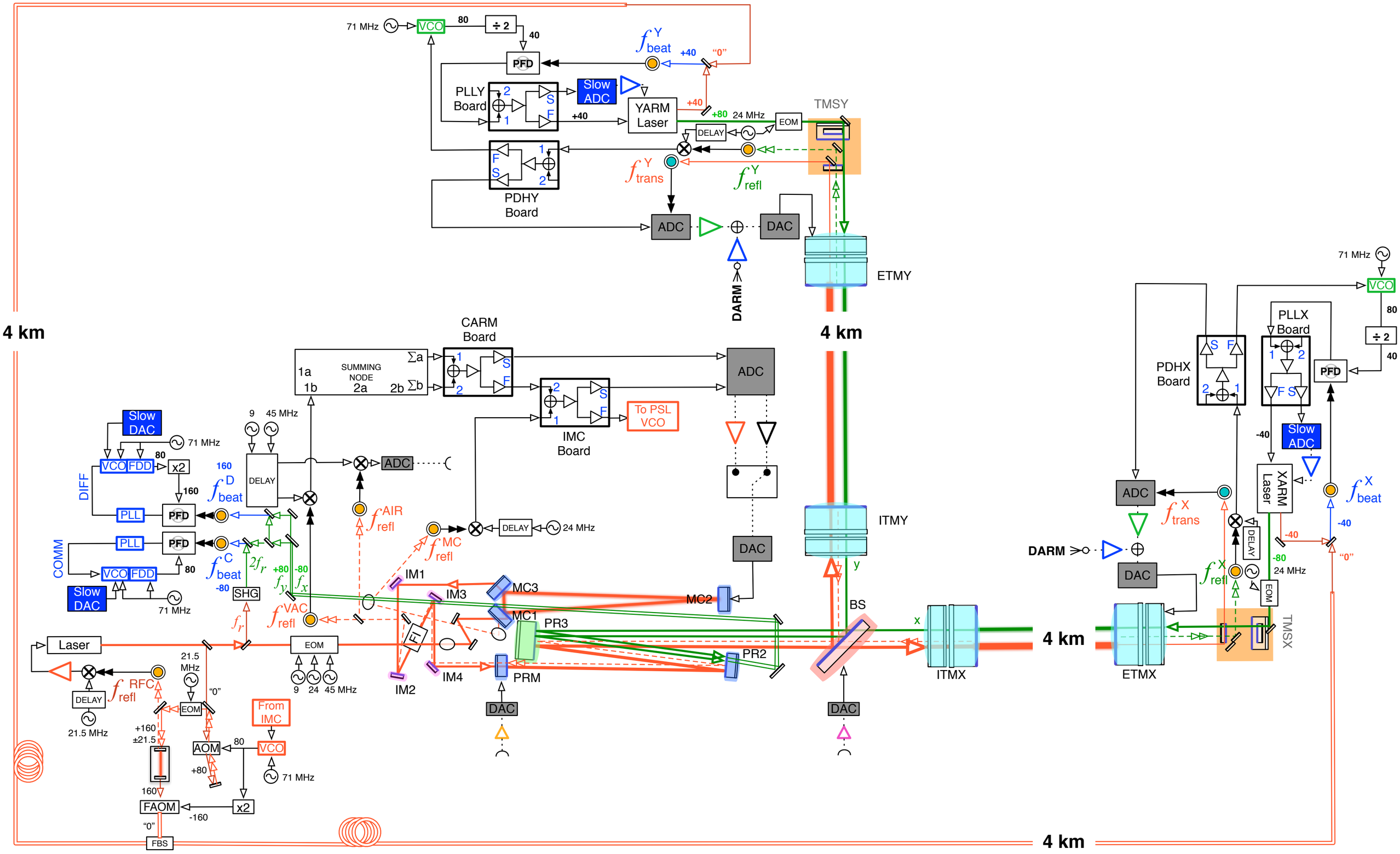

71 MHz
VCO
80
÷ 2
40
PFD
f^{Y}_{beat}
+40
"0"
PLLY Board
Slow ADC
YARM Laser
+40
+80
24 MHz
EOM
TMSY
DELAY
PDHY Board
f^{Y}_{trans}
f^{Y}_{refl}
ADC
DAC
DARM
ETMY
4 km
CARM Board
SUMMING NODE
1a
1b
2a
2b
Σa
Σb
IMC Board
To PSL VCO
ADC
DAC
ITMY
Slow DAC
71 MHz
VCO
FDD
x2
DIFF
PLL
PFD
COMM
Slow DAC
71 MHz
9
45 MHz
160
f^{D}_{beat}
DELAY
ADC
f^{AIR}_{refl}
f^{MC}_{refl}
DELAY
24 MHz
f^{C}_{beat}
-80
SHG
$2f_r$
+80
-80
f_y
f_x
f_r
f^{VAC}_{refl}
IM1
IM3
MC3
MC2
MC1
PR3
PR2
PRM
IM4
IM2
FI
BS
x
y
ITMX
Laser
EOM
9
24
45 MHz
21.5 MHz
DELAY
f^{RFC}_{refl}
21.5 MHz
"0"
EOM
+160
±21.5
AOM
80
+80
From IMC
VCO
71 MHz
160
FAOM
-160
x2
"0"
FBS
DAC
DAC
4 km
4 km
71 MHz
VCO
80
÷ 2
40
PLLX Board
PDHX Board
PFD
-40
Slow ADC
XARM Laser
f^{X}_{beat}
ADC
f^{X}_{trans}
DELAY
-40
-40
-80
24 MHz
"0"
DARM
DAC
f^{X}_{refl}
EOM
TMSX
ETMX