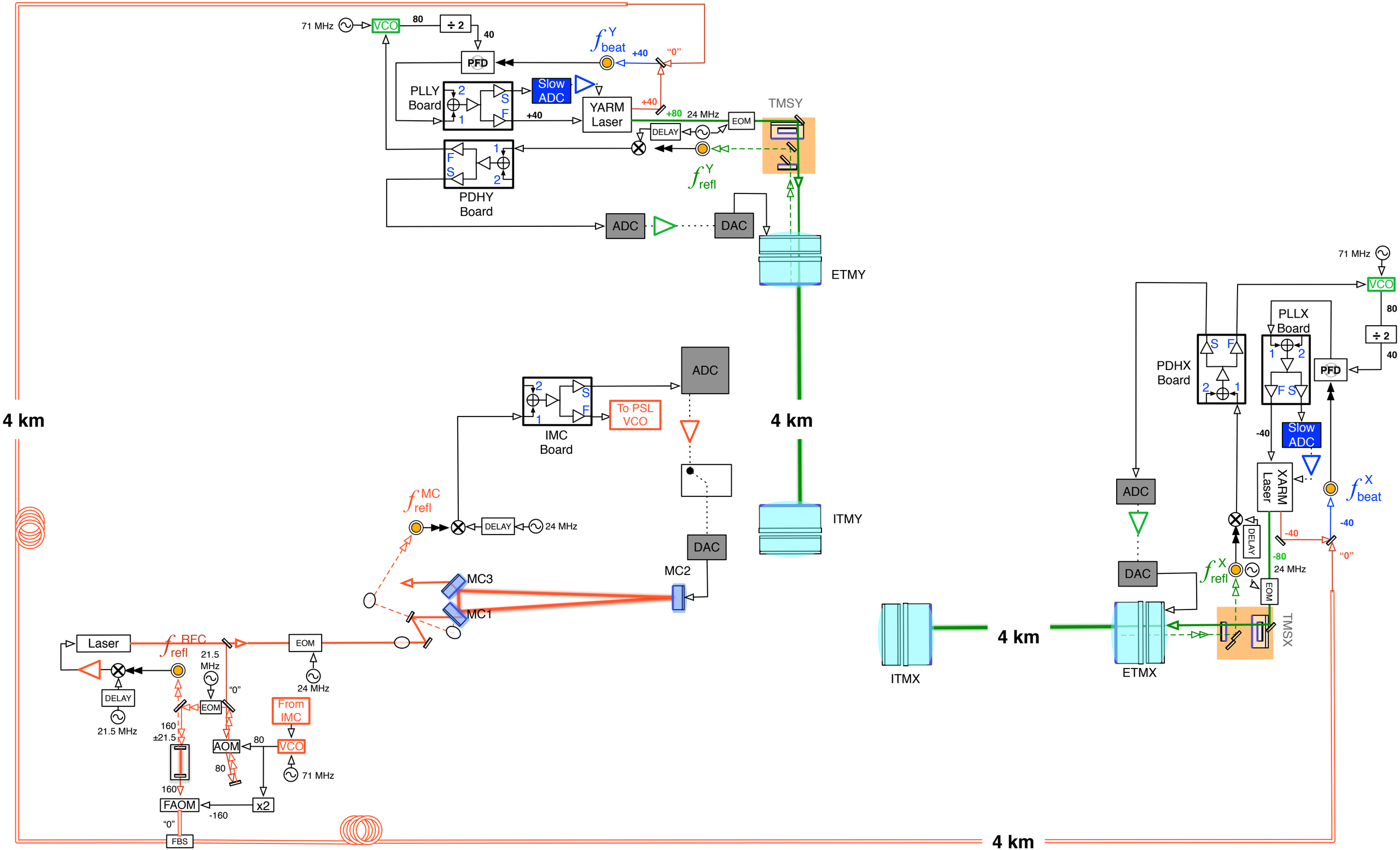
71 MHz
VCO
80
÷ 2
40
PFD
f^{Y}_{beat}
+40
"0"
PLLY Board
Slow ADC
YARM Laser
+40
+80
24 MHz
EOM
TMSY
DELAY
PDHY Board
f^{Y}_{refl}
ADC
DAC
ETMY
4 km
ADC
IMC Board
To PSL VCO
4 km
f^{MC}_{refl}
DELAY
24 MHz
DAC
ITMY
MC3
MC2
MC1
Laser
f^{BFC}_{refl}
21.5 MHz
EOM
24 MHz
DELAY
21.5 MHz
"0"
EOM
From IMC
160
±21.5
AOM
80
VCO
80
71 MHz
160
FAOM
x2
-160
"0"
FBS
4 km
ITMX
4 km
ETMX
71 MHz
VCO
80
PLLX Board
÷ 2
40
PDHX Board
PFD
-40
Slow ADC
ADC
XARM Laser
f^{X}_{beat}
-40
DELAY
-40
-80
24 MHz
"0"
DAC
f^{X}_{refl}
EOM
TMSX
ETMX
4 km