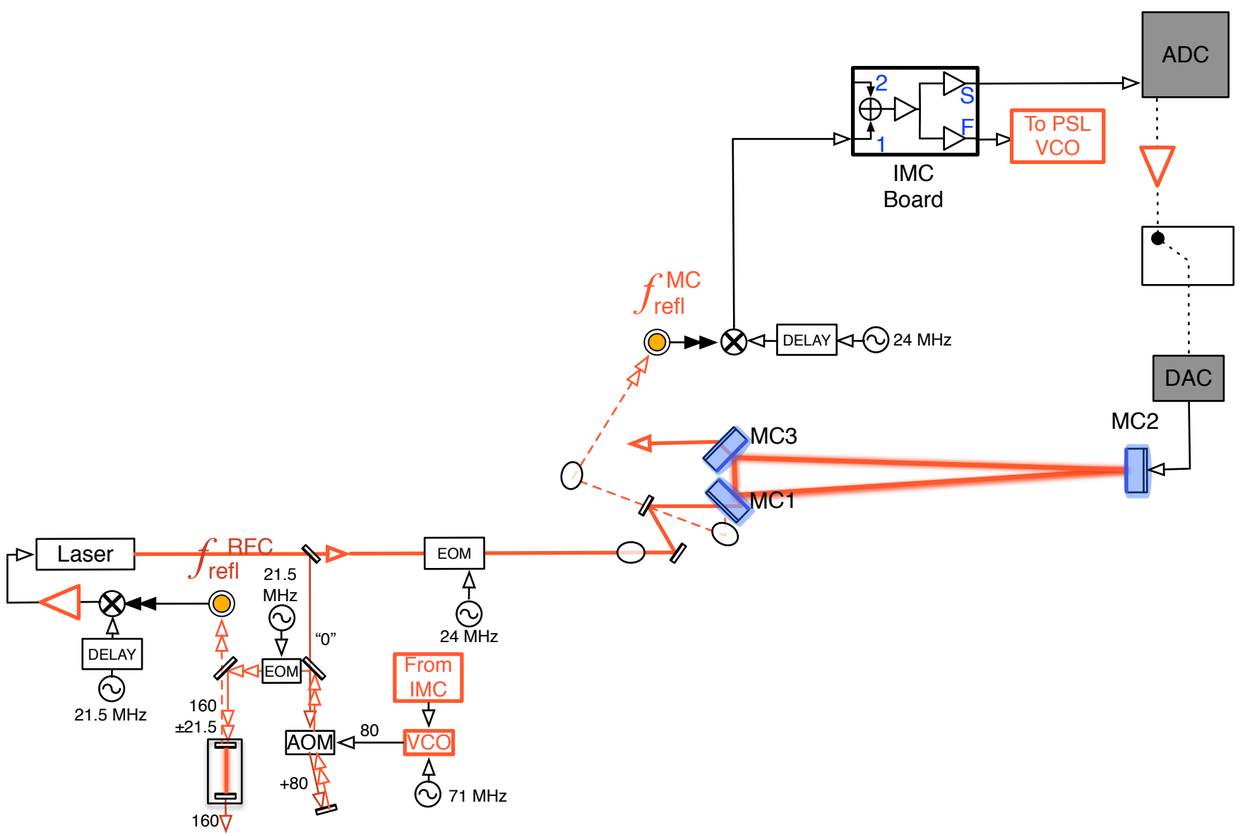
ADC
2
S
F
1
To PSL
VCO
IMC
Board
f^{MC}_{refl}
DELAY
24 MHz
DAC
MC2
MC3
MC1
Laser
f^{RFC}_{refl}
21.5
MHz
EOM
24 MHz
DELAY
21.5 MHz
"0"
EOM
From
IMC
160
±21.5
AOM
80
VCO
+80
71 MHz
160