NOTES: (UNLESS OTHERWISE SPECIFIED)

1. X

2. X

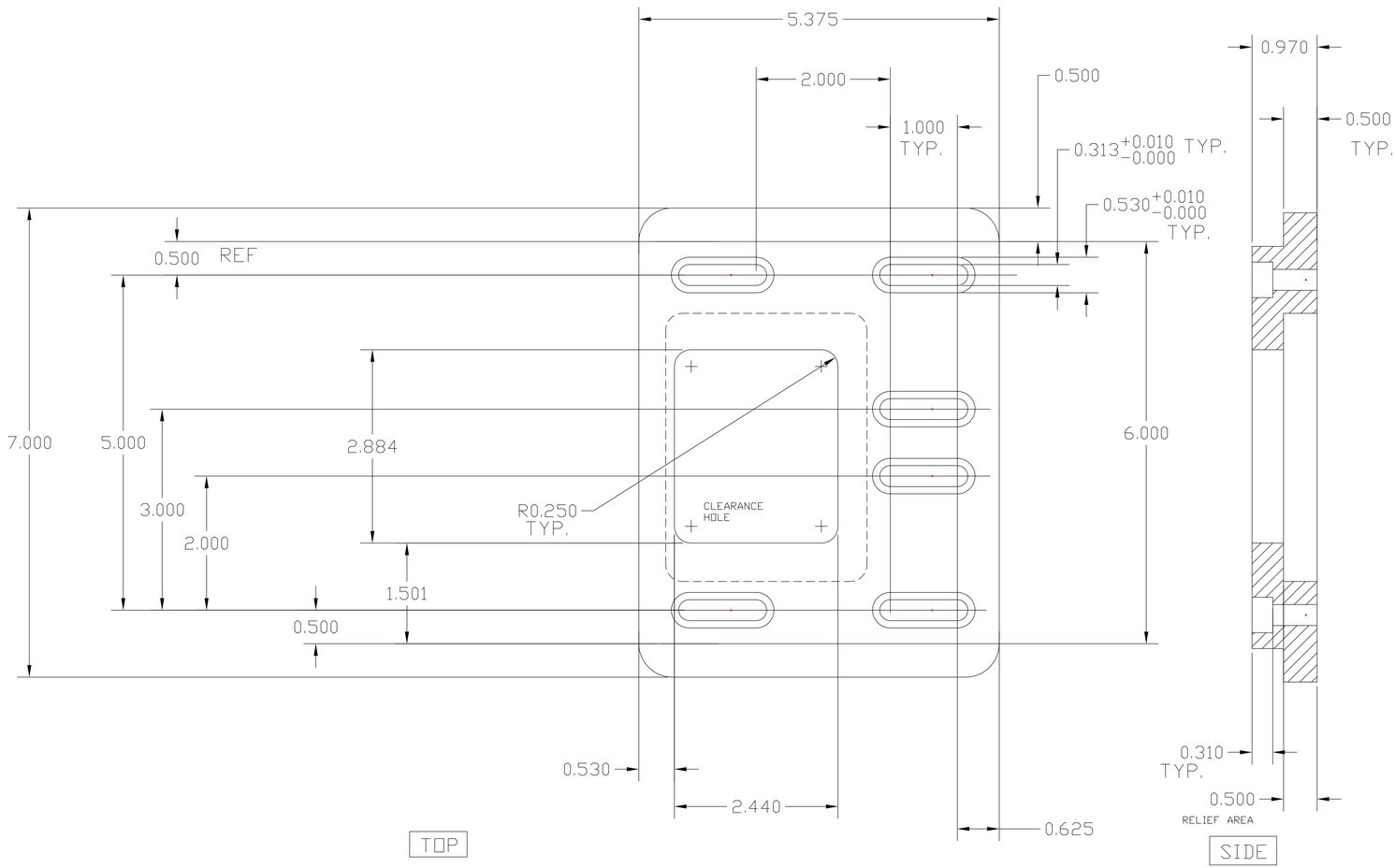

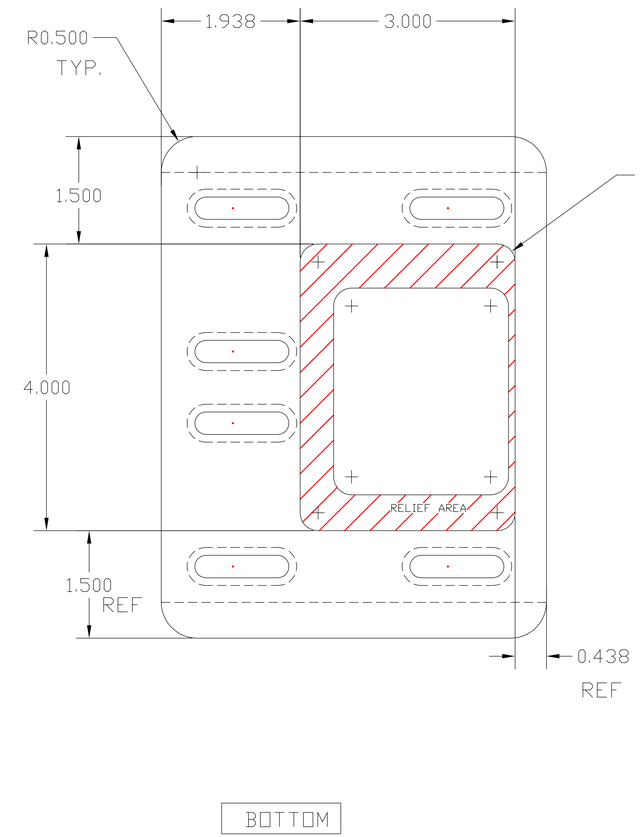

Foot # 1

MAKE ONE PER ASSEMBLY

REF	QTY	PART or DRWG No.	DESCRIPTION	MATERIAL
5	–	–	–	–
4	–	–	–	–
3	–	–	–	–
2	–	–	–	–
1	–	–	–	–

PARTS and MATERIAL LIST

DWG. NO.	DESCRIPTION
XXX	XXX

REFERENCE DRAWINGS

UNLESS OTHERWISE SPECIFIED
DIMENSIONS ARE IN INCHES

TOLERANCES:

FRACTIONAL ± 1/32
TWO PLACE DECIMAL ± .01
THREE PLACE DECIMAL ± .005
ANGULAR ± 1 deg.

~~ANGULARMACH ± BEND ±~~
FINISHED SURFACE RMS 63
BREAK CORNERS and EDGES
REMOVE ALL BURRS

MATERIAL:	HEAT TREAT:	FINISH:
Alum: 6061 T-6	TBD	None

USED ON: XXX | NEXT ASS'Y: XXX

REV	DESCRIPTION	DCN NUMBER		APPR'D	CHECK	DRWN	DATE
B	RELEASE	E010214-00-D				KENM	11-06-01
A	RELEASE	E010215-00-D				KENM	10-30-01
00	PRE-RELEASE	–	–	–	–	KENM	08-07-01

ISSUE DESCRIPTION

LIGO CALIFORNIA INSTITUTE OF TECHNOLOGY
MASSACHUSETTS INSTITUTE OF TECHNOLOGY

TITLE
FOOT #1

CAD FILE	SIZE	DWG. NO.
D010143-B	D	D010143-B

SCALE FULL | SHEET