REV.	DATE	DCN #	DRAWING TREE #
v1	20 MAR 2013	E1300202-x0	-
v2	07 MAR 2014	E1400134-x0	-
-	-	-	-

NOTES CONTINUED:

5. SCRIBE, ENGRAVE (A VIBRATORY TOOL MAY BE USED), LASER MARK OR MECHANICALLY STAMP (NO INKS OR DYES) DRAWING PART NUMBER, REVISION (AND VARIANT OR "TYPE" IF APPLICABLE) ON NOTED SURFACE OF PART FOLLOWED ON THE NEXT LINE WITH A THREE DIGIT SERIAL NUMBER. SERIAL NUMBERS START AT 001 FOR THE FIRST ARTICLE AND PROCEED CONSECUTIVELY. USE MINIMUM 0.12" HIGH CHARACTERS, UNLESS THE SIZE OF THE PART DICTATES SMALLER CHARACTERS. EXAMPLE: DXXXXXXX-VY, TYPE-XX, S/N XXX

6. MACHINE ALL SURFACES TO REMOVE OXIDES AND MILL FINISH, USE OF ABRASIVE REMOVAL TECHNIQUES IS NOT ALLOWED. REFER TO LIGO-E0900364

7. ALL PARTS SHALL BE MANUFACTURED IN ACCORDANCE WITH LIGO SPECIFICATION E0900364.

8. ALL HELI-COIL HOLES TO BE PREPARED ACCORDING TO EMHART HELI-COIL PRODUCT CATALOG, HC2000, REV 4

9. ALL HELI-COIL INSERTS TO BE INSTALLED BY LIGO PERSONNEL, AFTER DELIVERY OF FINISHED PARTS, USE NITRONIC 60 THREADED INSERTS.

10. ALL MATERIAL IS TO BE VIRGIN MATERIAL (i.e. NO WELD REPAIRS, PLUGS OR RECYCLED MATERIAL). NO REPAIRS SHALL BE MADE UNLESS APPROVED IN ADVANCE, AND IN WRITING, BY LIGO LABORATORY. REFER TO LIGO-E0900364.

11. UNLESS OTHERWISE SPECIFIED, MACHINE FILLET RADII .015 MAX.

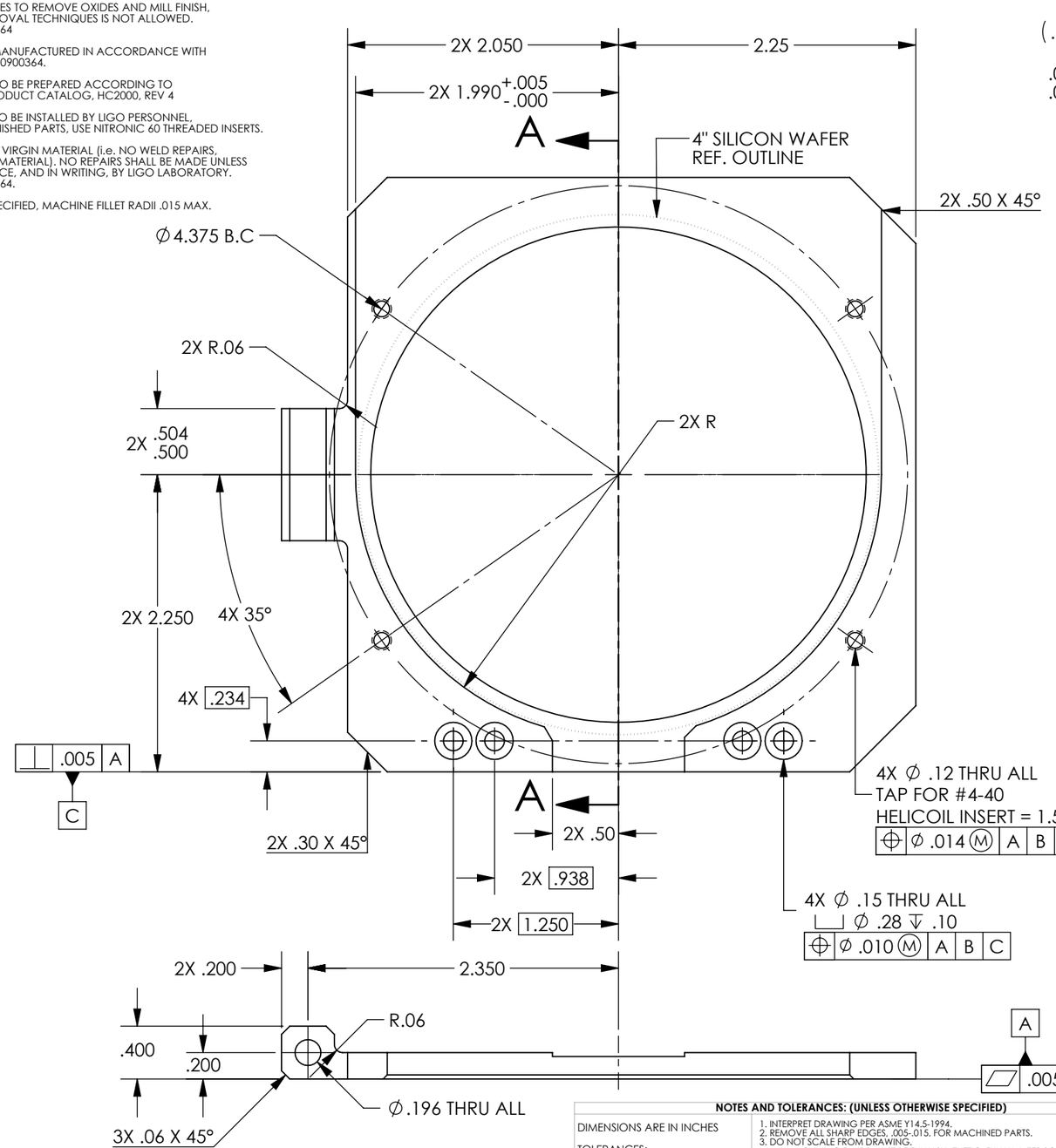

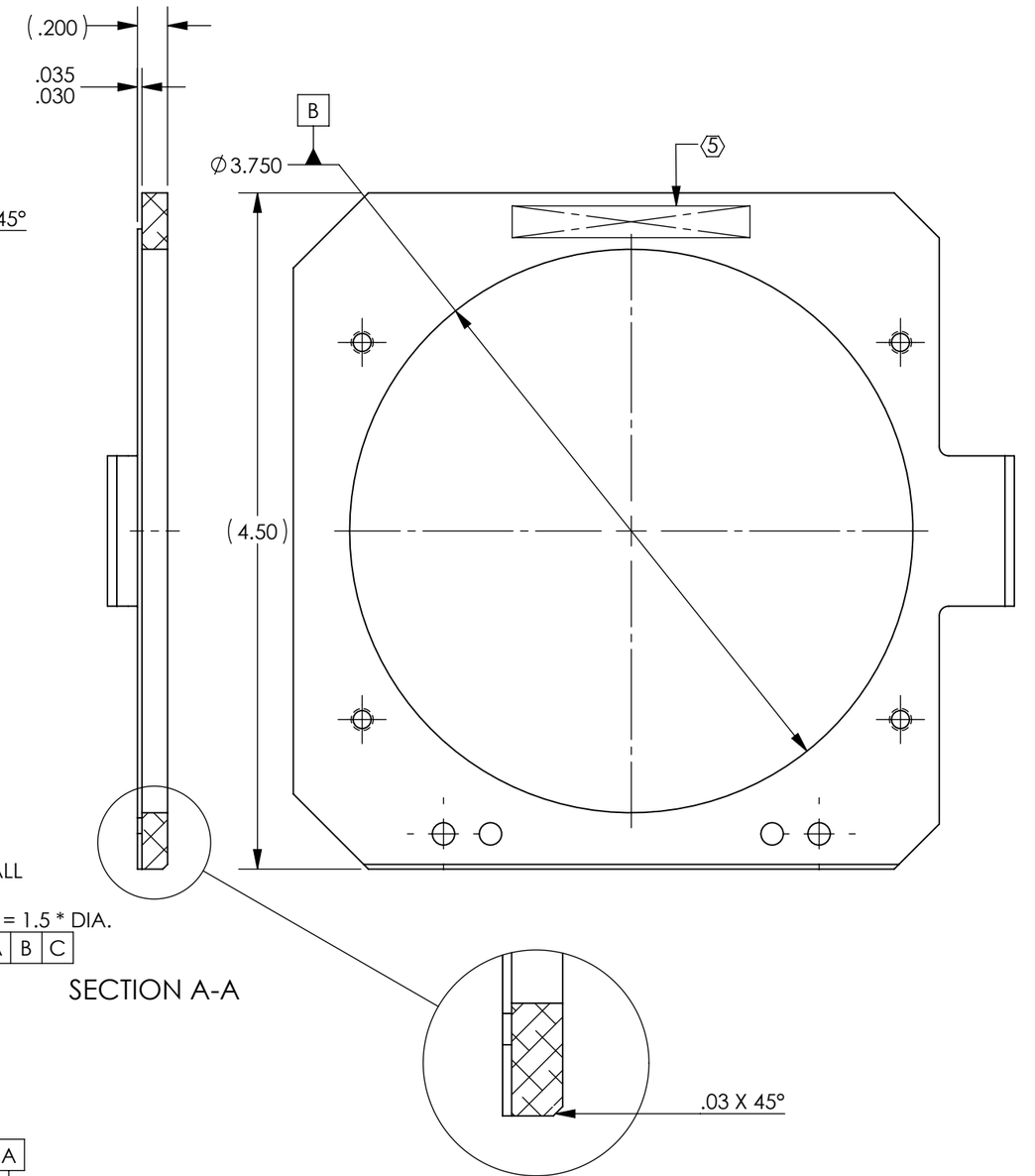

-101 DETAIL

NOTES AND TOLERANCES: (UNLESS OTHERWISE SPECIFIED)

DIMENSIONS ARE IN INCHES

TOLERANCES:
.XX ± .01
.XXX ± .005

ANGULAR ± 0.5°

1. INTERPRET DRAWING PER ASME Y14.5-1994.
2. REMOVE ALL SHARP EDGES, .005-.015. FOR MACHINED PARTS.
3. DO NOT SCALE FROM DRAWING.
4. ALL MACHINING FLUIDS MUST BE FULLY SYNTHETIC, FULLY WATER SOLUBLE AND FREE OF SULFUR, SILICONE, AND CHLORINE.

MATERIAL: 6061-T6 Al
FINISH: 63 µinch

LIGO — CALIFORNIA INSTITUTE OF TECHNOLOGY, MASSACHUSETTS INSTITUTE OF TECHNOLOGY

SYSTEM: ADVANCED LIGO
SUB-SYSTEM: SYS
NEXT ASSY: D1300275

PART NAME: aLIGO, 4 in. SILICON WAFER STAND, HOUSING

DESIGNER	E.SANCHEZ	19 MAR 2013	SIZE: B	DWG. NO. D1300273
DRAFTER	E.SANCHEZ	MAR 20 2013		REV. v2
CHECKER	SEE DCC	SEE DCC		
APPROVAL	SEE DCC	SEE DCC	SCALE: 1:1	PROJECTION:

SHEET 1 OF 2

D1300273_Aligo, 4 in. Silicon Wafer Stand, Housing, PART PDM REV: X-010, DRAWING PDM REV: X-008

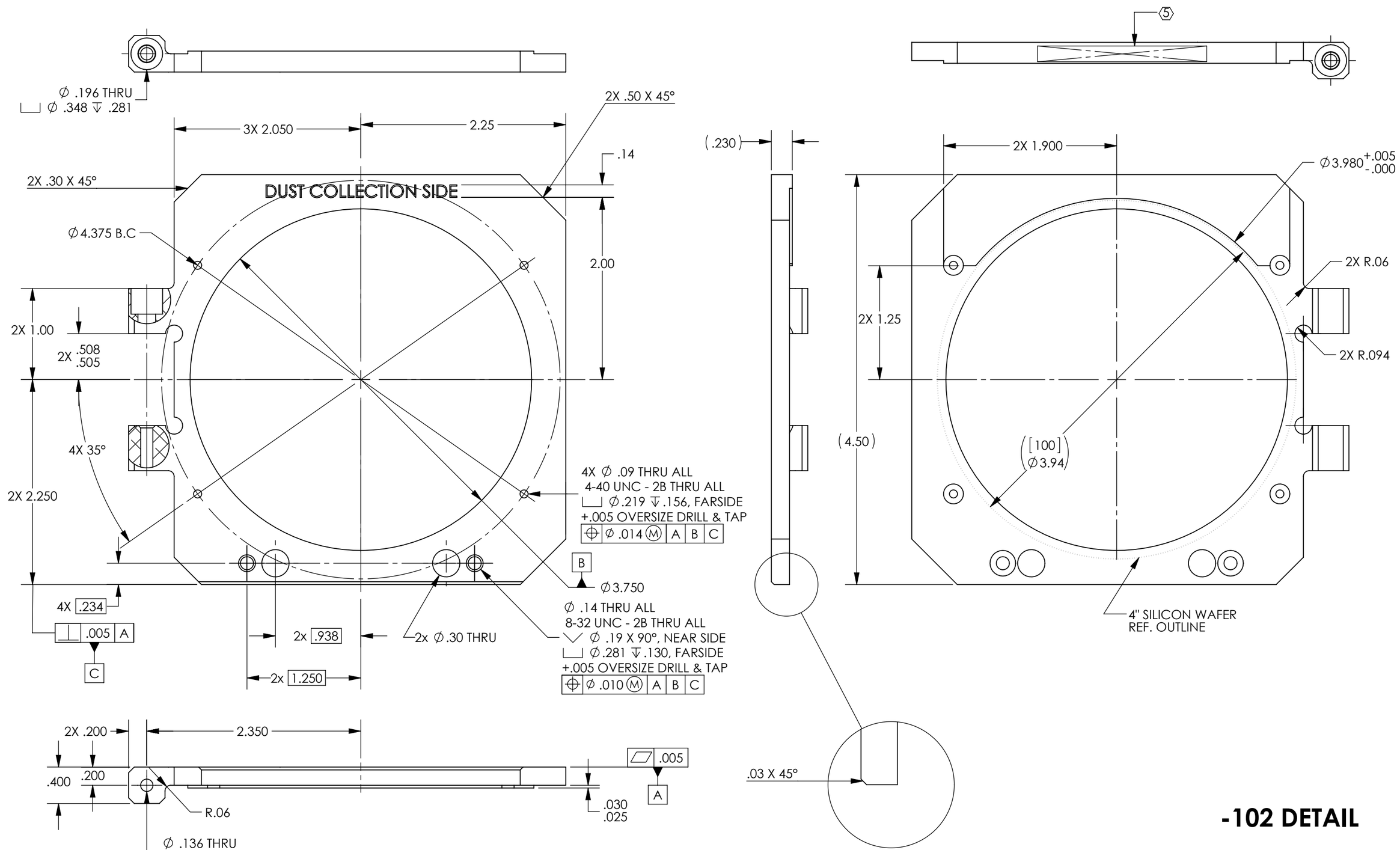
Ø .196 THRU
⌴ Ø .348 ↧ .281
3X 2.050
2.25
2X .50 X 45°
.14
2X .30 X 45°
DUST COLLECTION SIDE
Ø4.375 B.C
2.00
2X 1.00
2X .508 .505
4X 35°
2X 2.250
4X Ø .09 THRU ALL
4-40 UNC - 2B THRU ALL
⌴ Ø.219 ↧.156, FARSIDE
+.005 OVERSIZE DRILL & TAP
⊕ Ø .014 Ⓜ A B C
B
Ø3.750
Ø .14 THRU ALL
8-32 UNC - 2B THRU ALL
∨ Ø .19 X 90°, NEAR SIDE
⌴ Ø.281 ↧.130, FARSIDE
+.005 OVERSIZE DRILL & TAP
⊕ Ø .010 Ⓜ A B C
4X .234
⊥ .005 A
C
2x .938
2x Ø .30 THRU
2x 1.250
2X .200
2.350
.400
.200
R.06
.005
A
.030
.025
Ø .136 THRU
8-32 UNC - 2B THRU
∨ Ø .186 X 90°, FARSIDE
+.005 OVERSIZE DRILL & TAP
5
(.230)
2X 1.900
Ø3.980 +.005 -.000
2X R.06
2X 1.25
2X R.094
(4.50)
[100]
Ø3.94
4" SILICON WAFER
REF. OUTLINE
.03 X 45°
DETAIL B
SCALE 2 : 1
-102 DETAIL
LIGO
CALIFORNIA INSTITUTE OF TECHNOLOGY
MASSACHUSETTS INSTITUTE OF TECHNOLOGY
SIZE B
DWG. NO. D1300273
REV. v2
SCALE: 1:1
PROJECTION:
SHEET 2 OF 2
D1300273_Aligo, 4 in. Silicon Wafer Stand, Housing, PART PDM REV: X-010, DRAWING PDM REV: X-008