CALIFORNIA INSTITUTE OF TECHNOLOGY
MASSACHUSETTS INSTITUTE OF TECHNOLOGY

DCN No.	E990111-00-D
SHEET	1 OF 1

DOCUMENT CHANGE NOTICE (DCN)

DOCUMENT No. (DOC-REV-GP. ID)	TITLE	NEW REV.
D970610-00 (4 SHEETS)	INTERFEROMETER OPTOMECHANICAL LAYOUT LIVINGSTON SITE	A

CHANGE DESCRIPTION (FROM/TO):

SHEET 1 PLAN VIEW, TOTAL VACUUM EQUIPMENT AREA (LVEA & VEA), CORNER (VERTEX) & END STATIONS
SHEET 2 PLAN VIEW, LASER VACUUM EQUIPMENT AREA (LVEA), CORNER STATION
SHEET 3 ELEVATION VIEW, LASER VACUUM EQUIPMENT AREA (LVEA), VERTEX X-BEAM MANIFOLD
SHEET 4 ELEVATION VIEW, LASER VACUUM EQUIPMENT AREA (LVEA), VERTEX Y-BEAM MANIFOLD

REASON FOR CHANGE: INITIAL RELEASE.

ACTION: ☒ Incorporate change ☐ Attach DCN to drawing(s) ☐ Other action (specify):

DISPOSITION OF HARDWARE (IDENTIFY SERIAL NUMBERS)

- ☒ No hardware affected (record change only)
- ☐ List S/Ns which comply already:
- ☐ List S/Ns to be reworked or scrapped:
- ☐ List S/Ns to be built with this change:
- ☐ List S/Ns to be retested per this change:
- ☐
- ☐
- ☐
- ☐

DCN DISTRIBUTION

Althouse, Barish, Coles, Coyne, Lazzarini, Lindquist, Raab, Sanders, Shoemaker, Stapfer, Tyler, Weiss, Whitcomb, Zydowicz

M. Smith, P. Kabot, J. Romie, P. King, K. Mason, D. Reitze, J. Kern

SAFETY, COST, SCHEDULE, REQUIREMENTS IMPACT? ☒ No ☐ Yes (If yes, enter CR (CCB) or TCP (TRB) no.)

APPROVALS:		DATE	OTHER APPROVALS (specify)	DATE
ORIGINATOR:	P. Kabot Paul S. Kabot	11/8/99		
TASK LEADER:	M. Smith Michael Smith	11/12/99		
GROUP LEADER:	D. Coyne D. Coyne	11/15/99		
DCC RELEASE:	Linda Turner	11/16/99		

LIGO Form DCN-01 (3/96)

END STATION, Y-ARM
BSC 5

BSC 5 END STATION

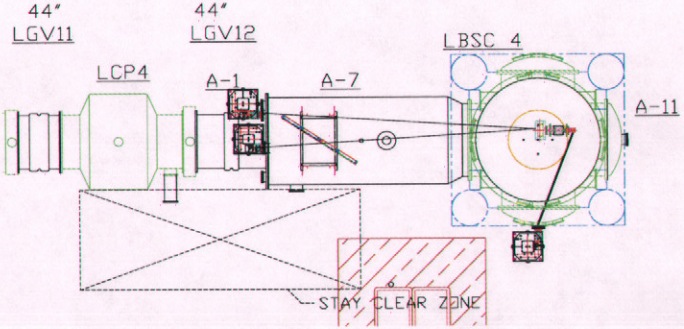

BSC 4 END STATION

PSL #1, HAM 1
4 K INPUT LASER

NOTES:

1. ANNULUS ION PUMPS ARE NOT SHOWN IN PROPER LOCATIONS (TO BE MOVED TO +Y SIDE OF VACUUM MANIFOLD).
2. MOVABLE CROSS-OVER STILE NOT SHOWN.
3. DETECTOR ASC SUBSYSTEM COMPONENTS NOT SHOWN.
4. NOT SHOWN YET IN ELEVATION:
   - CLEAN ROOM
   - PIPING UNDER VACUUM MANIFOLD

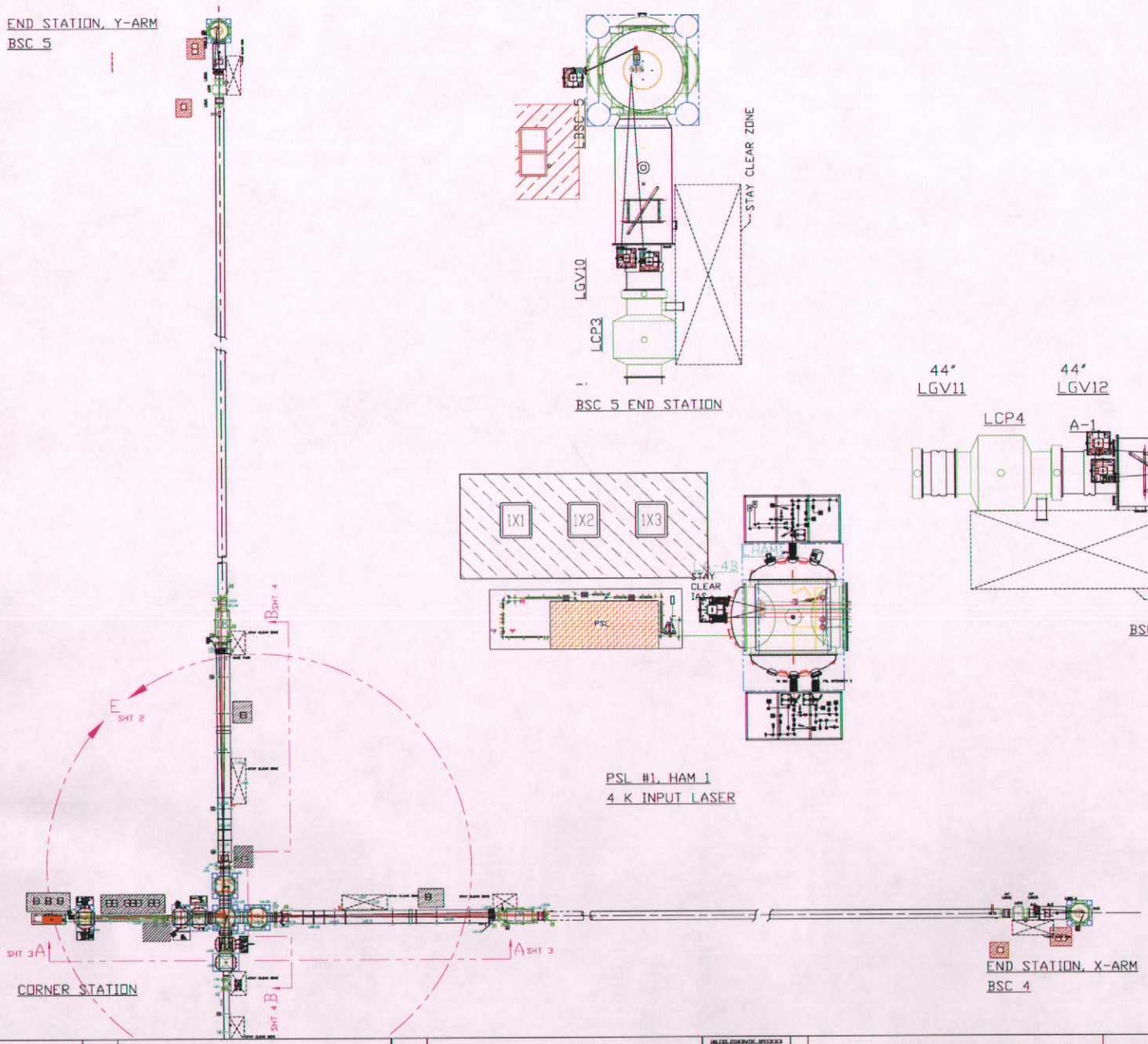

CORNER STATION

END STATION, X-ARM
BSC 4

ELECTRONIC COPY

DWG NO.	DESCRIPTION	DWG NO.	DESCRIPTION

REFERENCE DRAWINGS

UNLESS OTHERWISE SPECIFIED
DIMENSIONS ARE IN FEET (cm)
TOLERANCES:
FRACTIONAL ±
ANGULAR:MACH ± BEND ±
TWO PLACE DECIMAL ±
THREE PLACE DECIMAL ±
FINISHES: SURFACE ROUGHNESS
BREAK CORNERS .03 OUT
REMOVE ALL BURRS

DO NOT SCALE THIS DRAWING
USED ON
NEXT ASS'Y:

REV	DESCRIPTION	DCN NUMBER	DRWN	DATE
A	RELEASE	E990111	KABOT	11/3/99

ISSUE DESCRIPTION

LIGO CALIFORNIA INSTITUTE OF TECHNOLOGY MASSACHUSETTS INSTITUTE OF TECHNOLOGY

INTERFEROMETER OPTOMECHANICAL LAYOUT
LIVINGSTON SITE-PLAN VIEW
TOTAL VACUUM EQUIPMENT AREA (LVEA & VEA)
CORNER (VERTEX) & END STATIONS

CAD FILE	SIZE	DWG NO
D970610-A-sl.dwg	E	D970610-A

SCALE NTS SHEET 1 OF 4

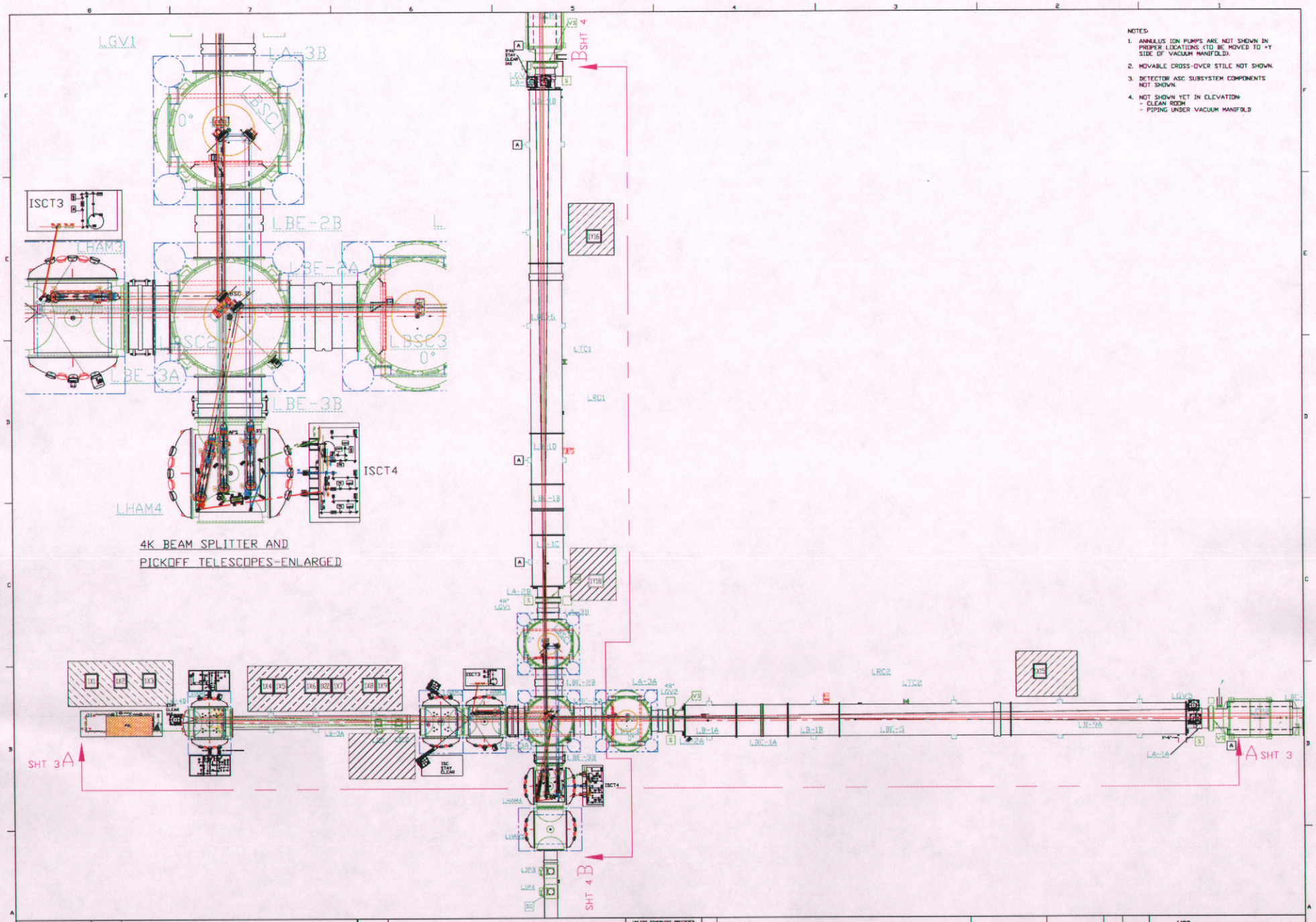

NOTES:

1. ANNULUS ION PUMPS ARE NOT SHOWN IN PROPER LOCATIONS (TO BE MOVED TO +Y SIDE OF VACUUM MANIFOLD).
2. MOVABLE CROSS-OVER STILE NOT SHOWN.
3. DETECTOR ASC SUBSYSTEM COMPONENTS NOT SHOWN.
4. NOT SHOWN YET IN ELEVATION:
   - CLEAN ROOM
   - PIPING UNDER VACUUM MANIFOLD

DWG. NO.	DESCRIPTION	DWG. NO.	DESCRIPTION
REFERENCE DRAWINGS			

UNLESS OTHERWISE SPECIFIED
DIMENSIONS ARE IN FEET (m)
TOLERANCES:
FRACTIONAL ± 1/16
ANGULAR ± 30MIN
TWO PLACE DECIMAL ±
THREE PLACE DECIMAL ±
FINISHES SURFACE RMS
BREAK SHARP EDGES
REMOVE ALL BURRS

DO NOT SCALE THIS DRAWING

USED ON
NEXT ASS'Y:

REV	DESCRIPTION	DCN NUMBER	DRWN	DATE
A	RELEASE	E990111	-	KARDT 11/5/99

ISSUE DESCRIPTION

LIGO CALIFORNIA INSTITUTE OF TECHNOLOGY
MASSACHUSETTS INSTITUTE OF TECHNOLOGY

INTERFEROMETER OPTOMECHANICAL LAYOUT
LIVINGSTON SITE-PLAN VIEW
LASER VACUUM EQUIPMENT AREA (LVEA)
CORNER STATION

CAD FILE: D970610-A-sE.dwg
SIZE: E
DWG NO.: D970610-A
SCALE: NTS
SHEET: 2 OF 4

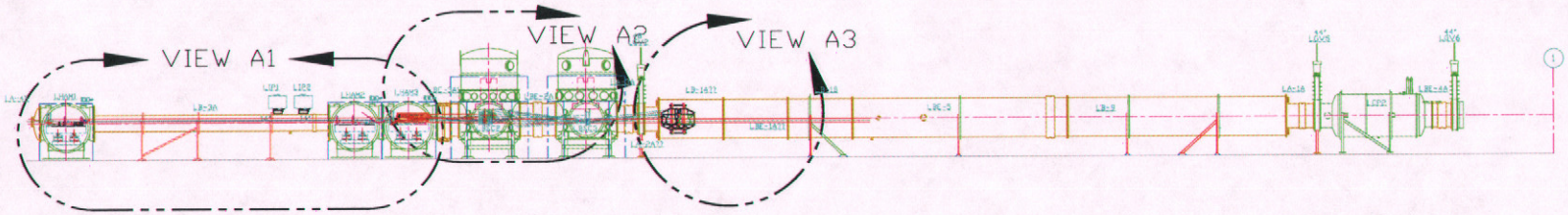

NOTES:

1. NOT SHOWN YET IN ELEVATION:
   -CLEAN ROOMS
   -PIPING UNDER VACUUM MANIFOLD
2. ONLY SEI EXTERNAL ENVELOPE AND OPTICS TABLES ARE SHOWN AROUND EACH CHAMBER.

ELEVATION "A-A" SEE D970610, SHEET 1

VERTEX X-BEAM MANIFOLD

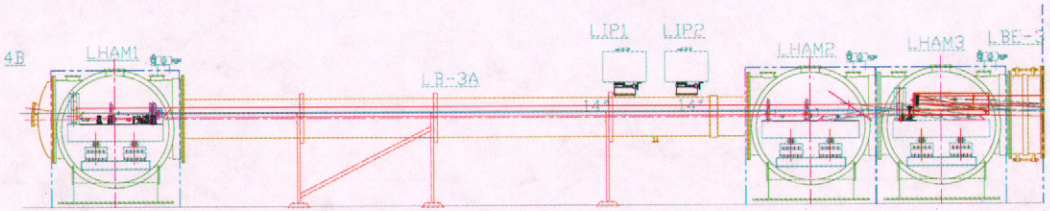

VIEW A1

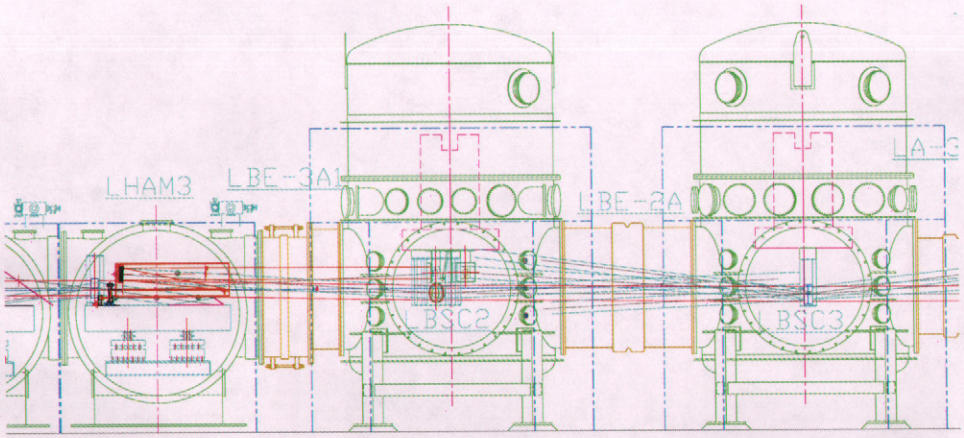

VIEW A2

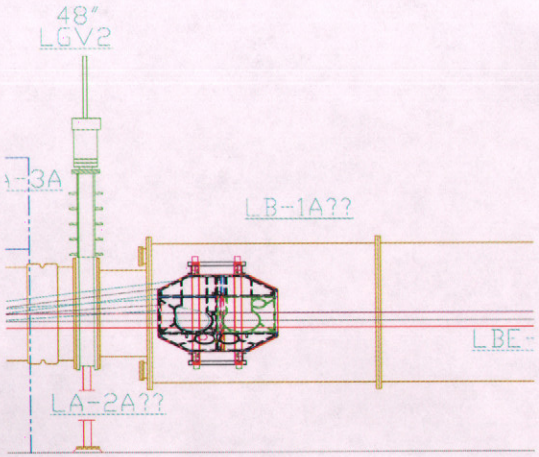

VIEW A3

DWG. NO.	DESCRIPTION	DWG. NO.	DESCRIPTION	DO NOT SCALE THIS DRAWING	A	RELEASE	E990111	-	KABOT	11-5-99	
REFERENCE DRAWINGS				USED ON:	REV	DESCRIPTION	ECN NUMBER	-	DRWN	DATE	
				NEXT ASS'Y:		ISSUE DESCRIPTION					

LIGO CALIFORNIA INSTITUTE OF TECHNOLOGY MASSACHUSETTS INSTITUTE OF TECHNOLOGY

INTERFEROMETER OPTOMECHANICAL LAYOUT
LIVINGSTON SITE-ELEVATION VIEW
LASER VACUUM EQUIPMENT AREA (LVEA)
VERTEX X-BEAM MANIFOLD

CAD FILE: D970610-A-S3.dwg | SIZE: E | DWG. NO.: D970610-A

SCALE: NTS | SHEET: 3 OF 4

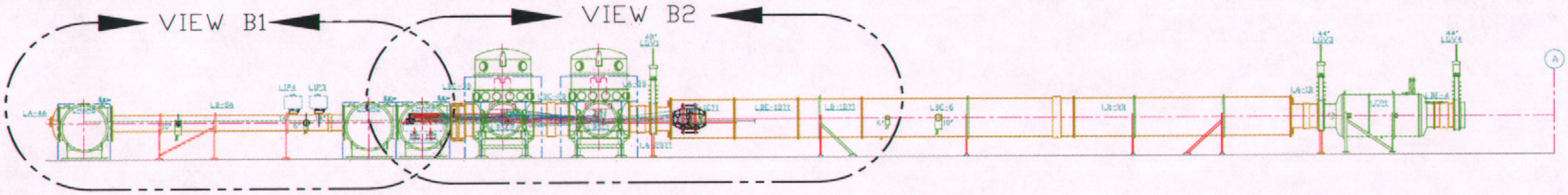

NOTES:

1. NOT SHOWN YET IN ELEVATION
   - CLEAN ROOMS
   - PIPING UNDER VACUUM MANIFOLD
2. ONLY SEI EXTERNAL ENVELOPE AND OPTICS TABLES ARE SHOWN AROUND EACH CHAMBER

ELEVATION "B-B" SEE D970610 SHEET 1

VERTEX Y-BEAM MANIFOLD

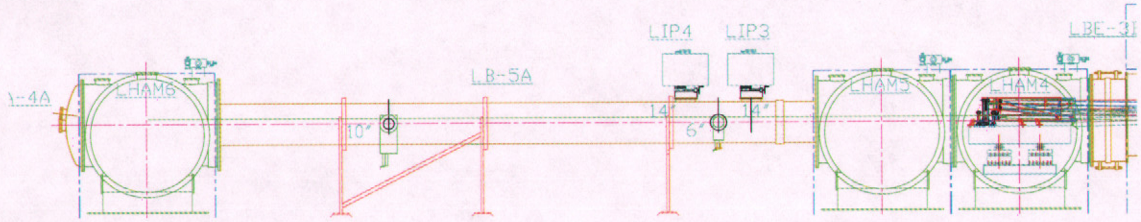

VIEW B1

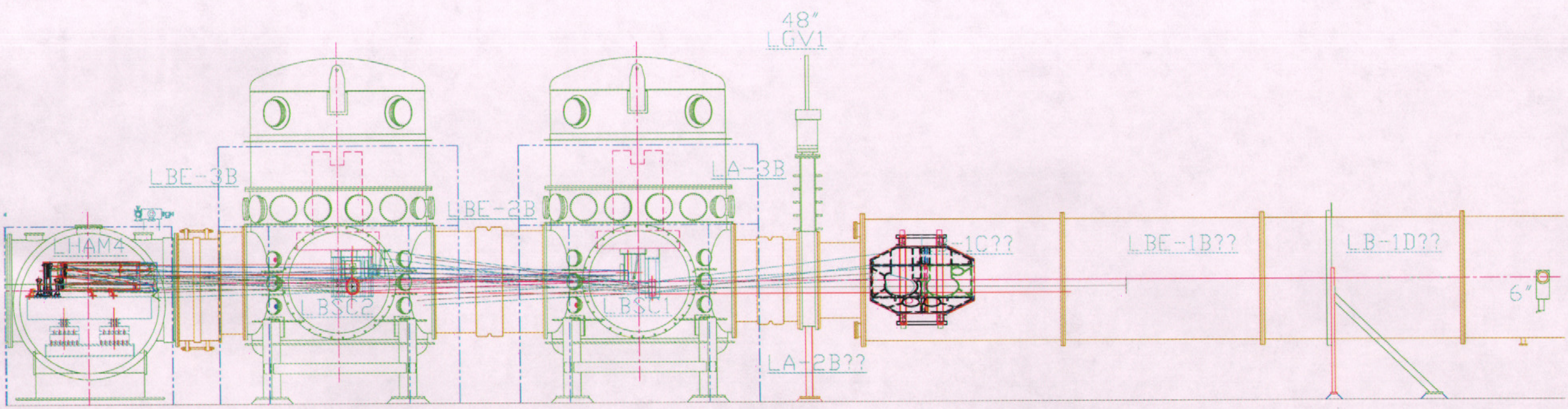

VIEW B2

DWG. NO.	DESCRIPTION	DWG. NO.	DESCRIPTION
REFERENCE DRAWINGS			

UNLESS OTHERWISE SPECIFIED
DIMENSIONS ARE IN FEET (in)
TOLERANCES:
FRACTIONAL ±
ANGULAR:MACH ± BEND ±
TWO PLACE DECIMAL ±
THREE PLACE DECIMAL ±
FINISHED SURFACE RMS
BREAK CORNERS IN OUT
REMOVE ALL BURRS

DO NOT SCALE THIS DRAWING
USED ON:
NEXT ASS'Y:

REV	DESCRIPTION	DCN NUMBER		DRWN	DATE
A	RELEASE	E990111	-	KABOT	2-16-99
ISSUE DESCRIPTION					

LIGO CALIFORNIA INSTITUTE OF TECHNOLOGY
MASSACHUSETTS INSTITUTE OF TECHNOLOGY

INTERFEROMETER OPTOMECHANICAL LAYOUT
LIVINGSTON SITE-ELEVATION VIEW
LASER VACUUM EQUIPMENT AREA (LVEA)
VERTEX Y-BEAM MANIFOLD

CAD FILE	SIZE	DWG. NO.
D970610-A-s4.dwg	E	D970610-A
SCALE: NTS		SHEET 4 OF 4