NOTES: (UNLESS OTHERWISE SPECIFIED)

1. CUTTING FLUIDS TO BE WATER SOLUBLE AND FREE OF SULFUR, CHLORINE, & SILICONE.
2. STEEL STAMP OR ENGRAVE THE DRAWING PART NUMBER ON NOTED FACE OF PART FOLLOWED BY "S/N", THEN A THREE DIGIT SERIAL NUMBER. SERIAL NUMBERS TO START AT 001 FOR FIRST PART AND PROCEED IN A CONSECUTIVE MANNER TO A MAXIMUM OF 999, FOR EACH SUCCEEDING PART PRODUCED. USE 0.13 HIGH CHARACTERS.
   EXAMPLE: D990038-A S/N 001

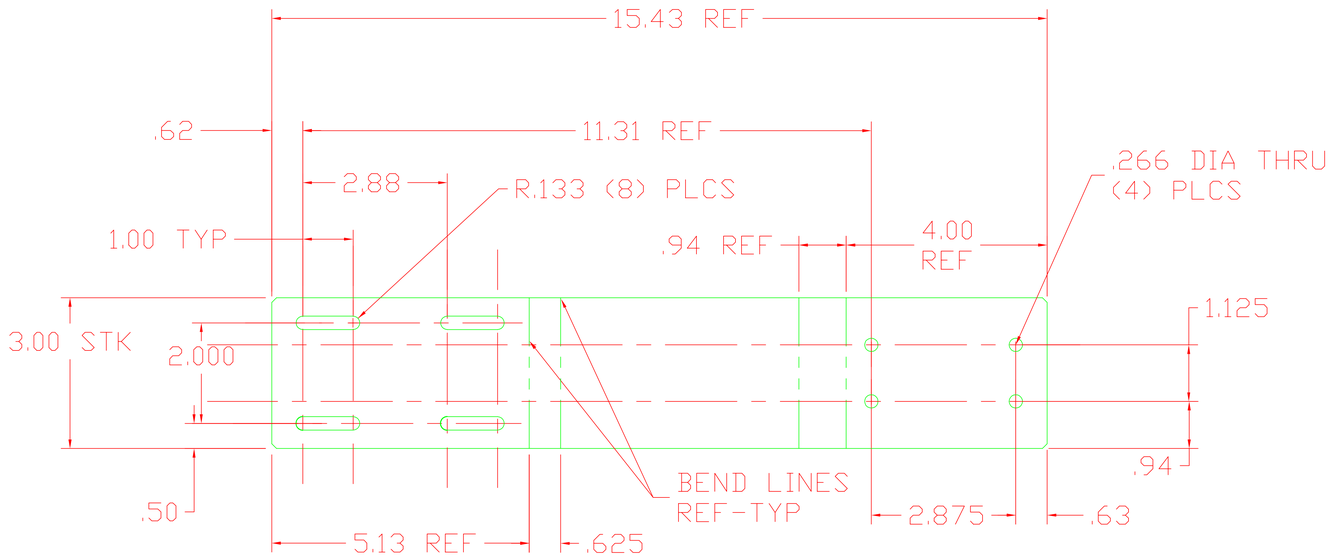


FLAT PATTERN-REF

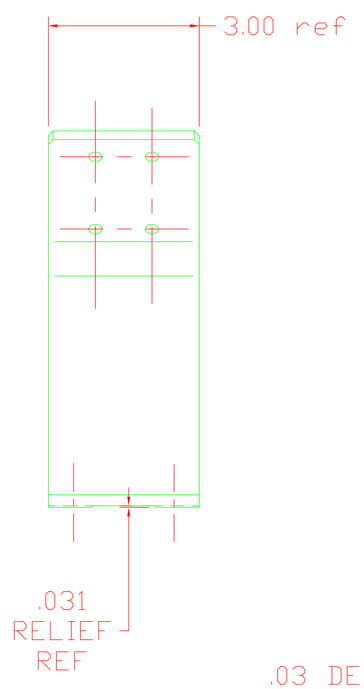


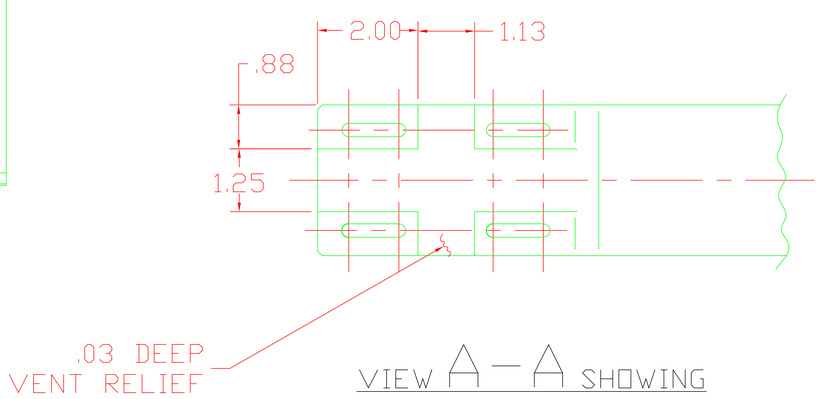


VIEW A – A SHOWING
.03 DEEP VENT RELIEF

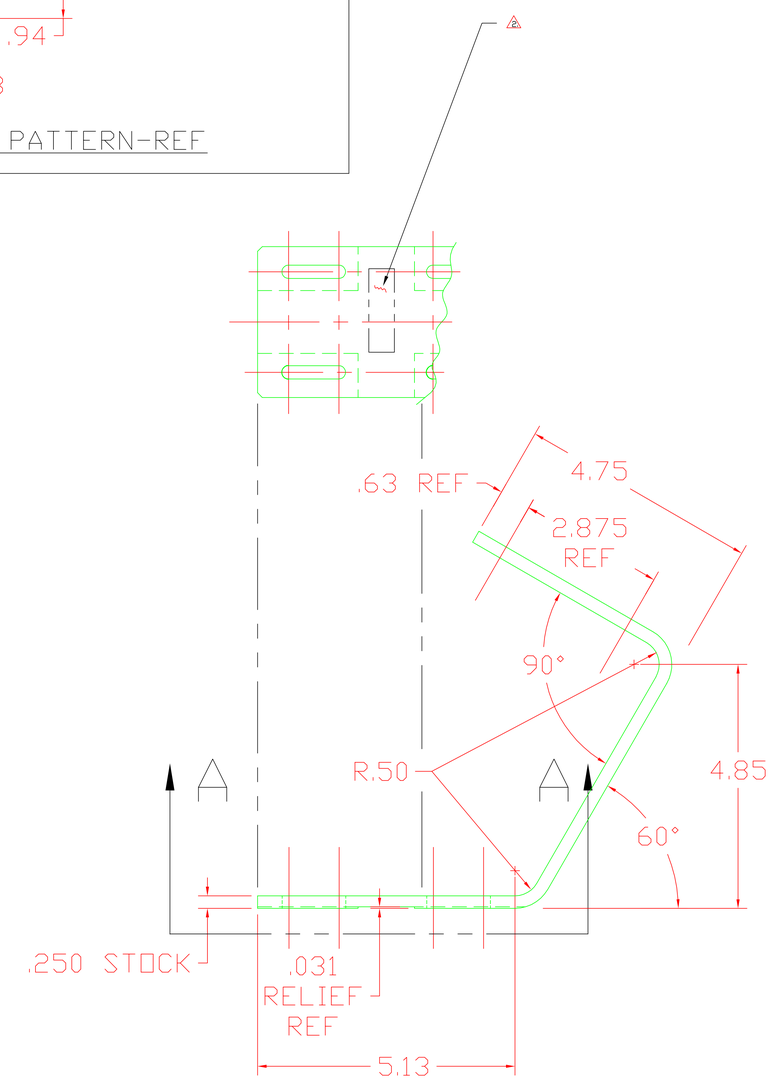


| DWG. NO. | DESCRIPTION |
|---|---|
| REFERENCE DRAWINGS | |

UNLESS OTHERWISE SPECIFIED
DIMENSIONS ARE IN INCHES [mm]

TOLERANCES:
FRACTIONAL ± 1/64
ANGULAR ± 1/2°
ANGULARMACH ± BEND ±
TWO PLACE DECIMAL ±.01
THREE PLACE DECIMAL ±.005
FINISHED SURFACE RMS
BREAK CORNERS .005 - .015
REMOVE ALL BURRS

MATERIAL: 300 SERIES STAINLESS STEEL .250 X 3.00 BAR
HEAT TREAT:
FINISH:
USED ON:
NEXT ASS'Y: D990230

| REV | DESCRIPTION | DCN NUMBER | | APPR'D | CHECK | DRWN | DATE |
|---|---|---|---|---|---|---|---|
| B | RELEASE | E990209 | - | - | - | KABOT | 5-25-99 |
| A | RELEASE | E990198 | - | - | - | KABOT | 4-30-99 |

ISSUE DESCRIPTION

LIGO CALIFORNIA INSTITUTE OF TECHNOLOGY
MASSACHUSETTS INSTITUTE OF TECHNOLOGY

BEAM DUMP
FLEX HINGE, TOP STRAP

CAD FILE top_strap.dwg
SIZE E
DWG. NO. D990202-B
SCALE NTS
SHEET 1 OF 1