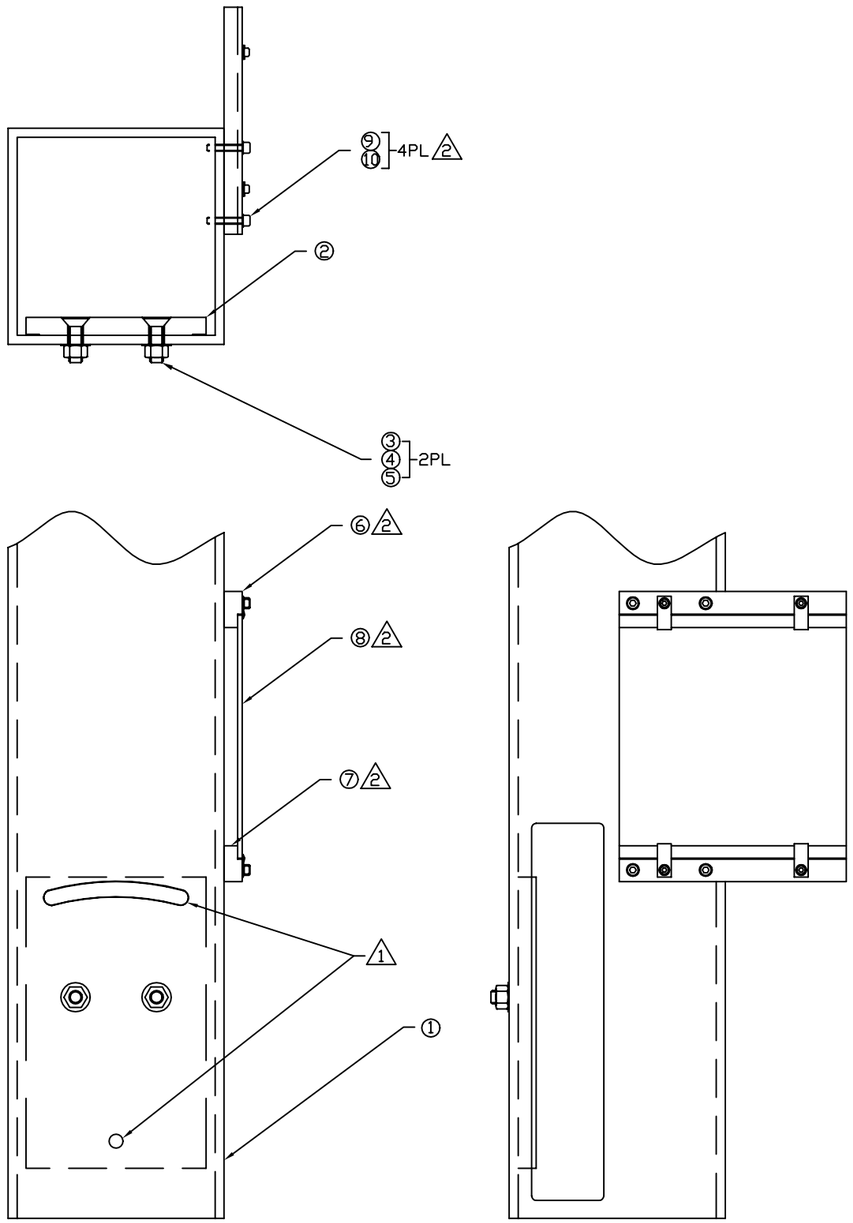

NOTES: (UNLESS OTHERWISE SPECIFIED)

1. ALIGN NOTED MATING FEATURES IN ITEMS 1 & 2 AS FOLLOWS:

   ALIGN HOLES USING A SIZE V (Ø.377) OR W (Ø.386) DRILL ROD OR EQUIVALENT. ROTATE SLOTS INTO ALIGNMENT BY EYE, THEN FASTEN HARDWARE.

2. DOUBLE BEAMDUMPS ONLY.

REF.	QTY.	PART or DRWG No.	NOMENCLATURE or DESCRIPTION	MATERIAL
10	4	U-C Components WFV-10	.195 ID X .354 OD X .032 THICK FLAT WASHER	18-8 ST STEEL
9	4	McM-Carr 92185A247	#10-24 X 1.00 SOCKET HEAD CAP SCREW	316 ST STEEL
8	1	D990218	GLASS	-
7	1	D990237	FRAME ASSEMBLY, LOWER	-
6	1	D990236	FRAME ASSEMBLY, UPPER	-
5	2	U-C Components WFV-38	.39 ID X .625 OD X .032 THICK FLAT WASHER	18-8 ST STEEL
4	2	McM-Carr 94804A320	3/8-16 HEX NUT	316 ST STEEL
3	2	McM-Carr 90585A626	3/8-16 X 1.25 SOCKETED FLAT HEAD SCREW	316 ST STEEL
2	1	D990140	HOUSING PLATE	-
1	1	-	HOUSING TUBE	-

PARTS and MATERIAL LIST

DWG. NO.	DESCRIPTION

REFERENCE DRAWINGS

UNLESS OTHERWISE SPECIFIED
DIMENSIONS ARE IN INCHES

TOLERANCES:
FRACTIONAL ±
ANGULAR ±
ANGULARMACH ± BEND ±
TWO PLACE DECIMAL

THREE PLACE DECIMAL
FINISHED SURFACE RMS
BREAK CORNERS IN: OUT:
REMOVE ALL BURRS

MATERIAL: HEAT TREAT: FINISH:

USED ON: NEXT ASS'Y: D990230

REV	DESCRIPTION	APPR'D	CHECK	DRWN	DATE
B	DCN E990205			Conley	5-6-99
A	DCN E990133			Conley	3-17-99

ISSUE DESCRIPTION

LIGO CALIFORNIA INSTITUTE OF TECHNOLOGY
MASSACHUSETTS INSTITUTE OF TECHNOLOGY

CAVITY BEAM DUMP
HOUSING ASSEMBLY

CAD FILE: D990141-B.dwg
SIZE: B
DWG. NO.: D990141-B
SCALE: NTS
SHEET: 1 OF 1