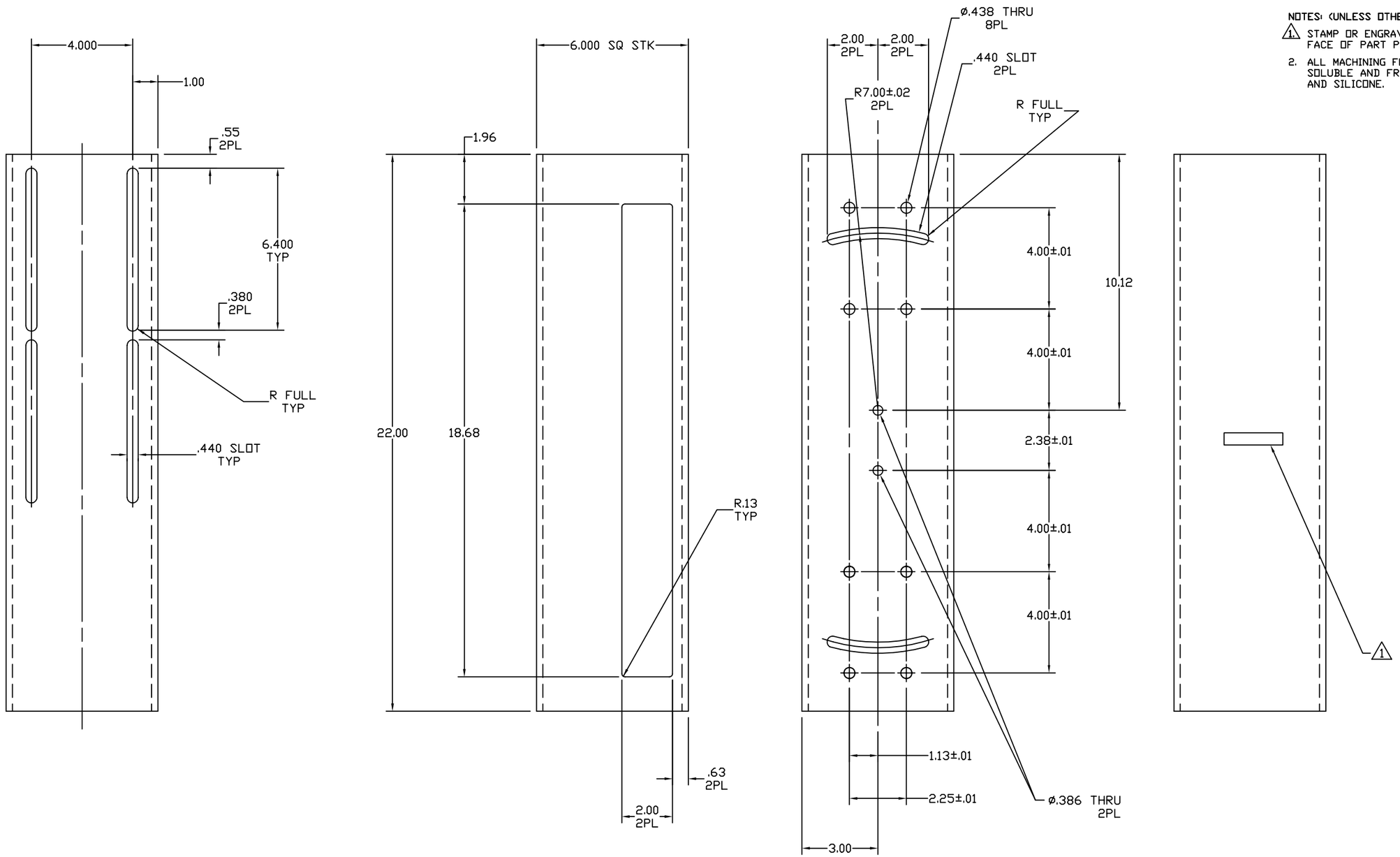

NOTES: (UNLESS OTHERWISE SPECIFIED)

1. STAMP OR ENGRAVE SERIAL NUMBER ON NOTED FACE OF PART PER LIGO L970196.
2. ALL MACHINING FLUIDS SHALL BE WATER SOLUBLE AND FREE OF SULFUR, CHLORINE, AND SILICONE.

UNLESS OTHERWISE SPECIFIED
DIMENSIONS ARE IN INCHES

TOLERANCES:
FRACTIONAL ±
ANGULAR ±
ANGULARMACH ± BEND ±
TWO PLACE DECIMAL ±.03

THREE PLACE DECIMAL ±.005
FINISHED SURFACE RMS
BREAK CORNERS IN: OUT: .005-.010
REMOVE ALL BURRS

MATERIAL: 6061-T6 ALU TUBING 6" SQ, 1/4" WALL
HEAT TREAT:
FINISH:

DWG. NO.	DESCRIPTION
REFERENCE DRAWINGS	

USED ON:
NEXT ASS'Y: D990142

REV	DESCRIPTION	APPR'D	CHECK	DRWN	DATE
A	DCN E990108			Conley	3-16-99

ISSUE DESCRIPTION

LIGO CALIFORNIA INSTITUTE OF TECHNOLOGY
MASSACHUSETTS INSTITUTE OF TECHNOLOGY

CAVITY BEAM DUMP
HOUSING TUBE
(DOUBLE)

CAD FILE: D990139-A.dwg
SIZE: B
DWG. NO.: D990139-A
SCALE: NTS
SHEET: 1 OF 1