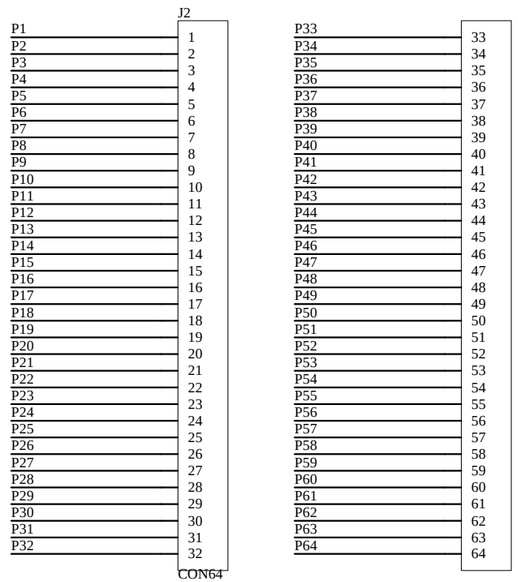

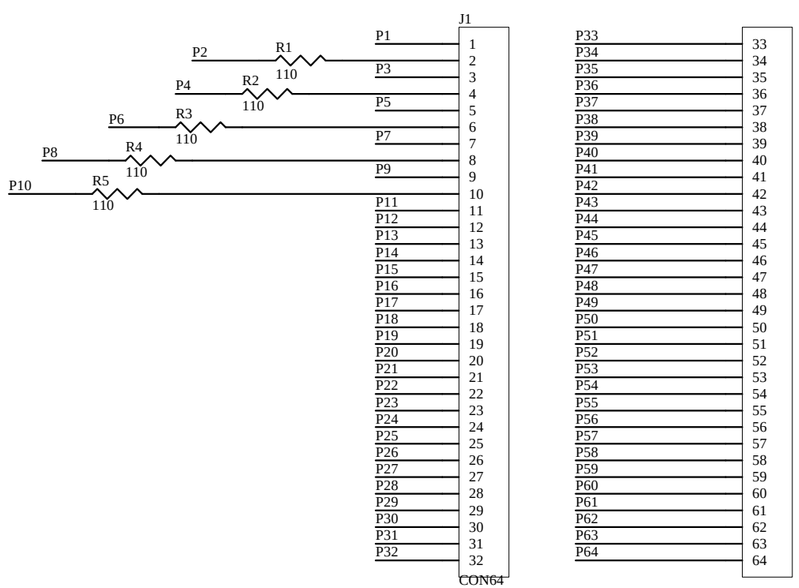

Title **Satellite Amplifier Terminator Board**			*LIGO Project* *California Institute of Technology* *Massachusetts Institute of Technology*
Size: B	Number: D990021	Revision: 00	*J. Heefner*
File: I:\CAD\LIGO\USERS\JAY\SATLTERM.SCH	Date: 14-Feb-95	Time: 12:12:49	Sheet 1 of 1

LIGO