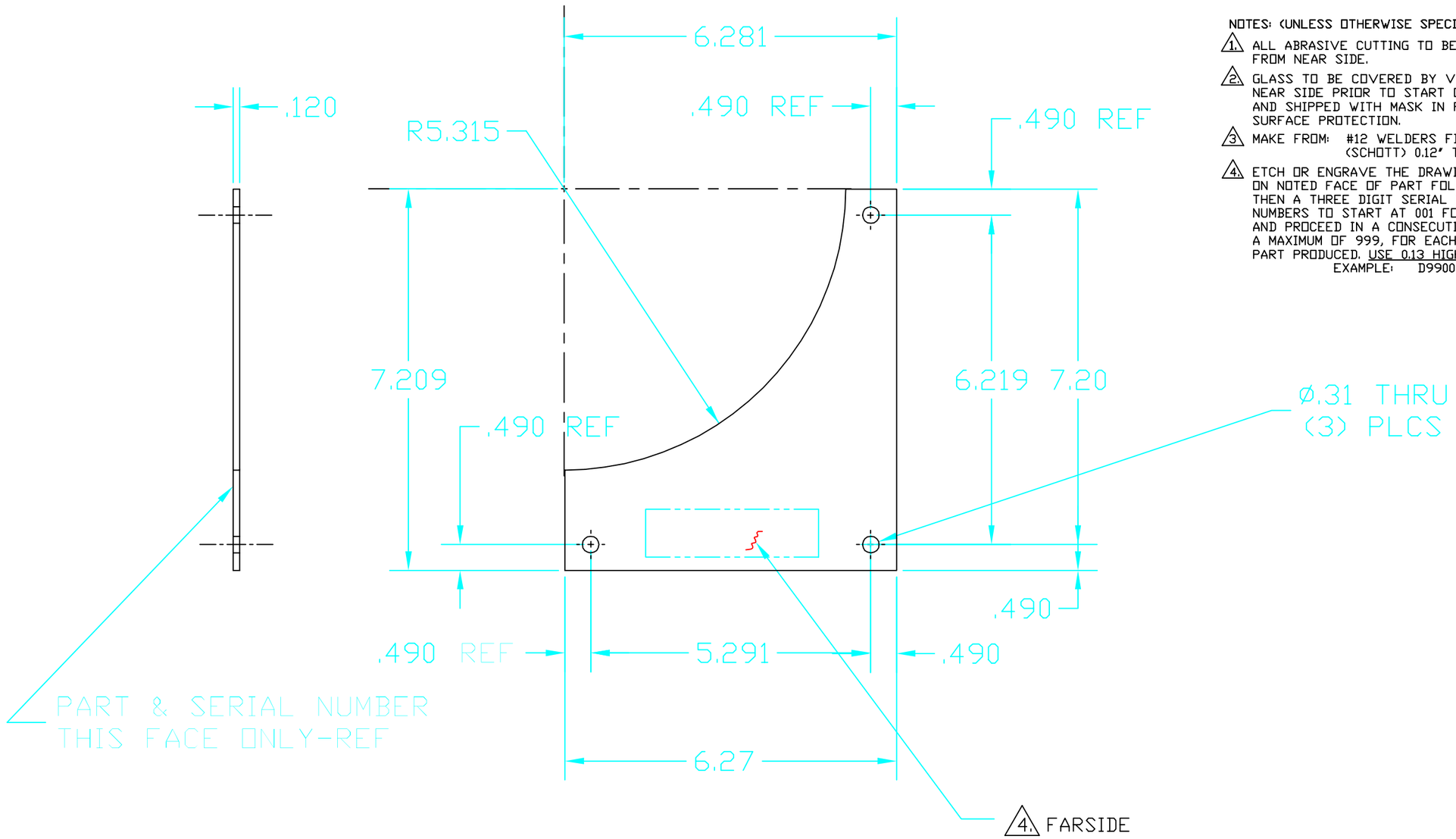

NOTES: (UNLESS OTHERWISE SPECIFIED)

1. ALL ABRASIVE CUTTING TO BE DONE FROM NEAR SIDE.
2. GLASS TO BE COVERED BY VINYL MASK ON NEAR SIDE PRIOR TO START OF MACHINING, AND SHIPPED WITH MASK IN PLACE FOR SURFACE PROTECTION.
3. MAKE FROM: #12 WELDERS FILTER GLASS (SCHOTT) 0.12" THICK.
4. ETCH OR ENGRAVE THE DRAWING PART NUMBER ON NOTED FACE OF PART FOLLOWED BY "S/N", THEN A THREE DIGIT SERIAL NUMBER. SERIAL NUMBERS TO START AT 001 FOR FIRST PART AND PROCEED IN A CONSECUTIVE MANNER TO A MAXIMUM OF 999, FOR EACH SUCCEEDING PART PRODUCED. USE 0.13 HIGH CHARACTERS.
   EXAMPLE: D990038-A S/N 001

DWG. NO.	DESCRIPTION
REFERENCE DRAWINGS	

UNLESS OTHERWISE SPECIFIED
DIMENSIONS ARE IN INCHES

TOLERANCES:
FRACTIONAL ± 1/64
ANGULAR ± 1/2°
ANGULARMACH ± BEND ±
TWO PLACE DECIMAL ± .01
THREE PLACE DECIMAL ± .005
FINISHED SURFACE RMS
BREAK CORNERS .002-.010
REMOVE ALL BURRS

MATERIAL: 3.
HEAT TREAT:
FINISH: 1. 2. 4.

USED ON:
NEXT ASS'Y: D990597, D990616

REV	DESCRIPTION	DCN NUMBER		APPR'D	CHECK	DRWN	DATE
A	RELEASE	E990036	-	-	-	KABOT	10-5-99
00	PRE-RELEASE	-	-	-	-	A. ROSA	4-23-98

ISSUE DESCRIPTION

LIGO CALIFORNIA INSTITUTE OF TECHNOLOGY
MASSACHUSETTS INSTITUTE OF TECHNOLOGY

I. O. BAFFLE,
GLASS, TOP LEFT SEGMENT

CAD FILE	SIZE	DWG. NO.
io_mirr14.dwg	B	D980694-A
SCALE NTS		SHEET 1 OF 1