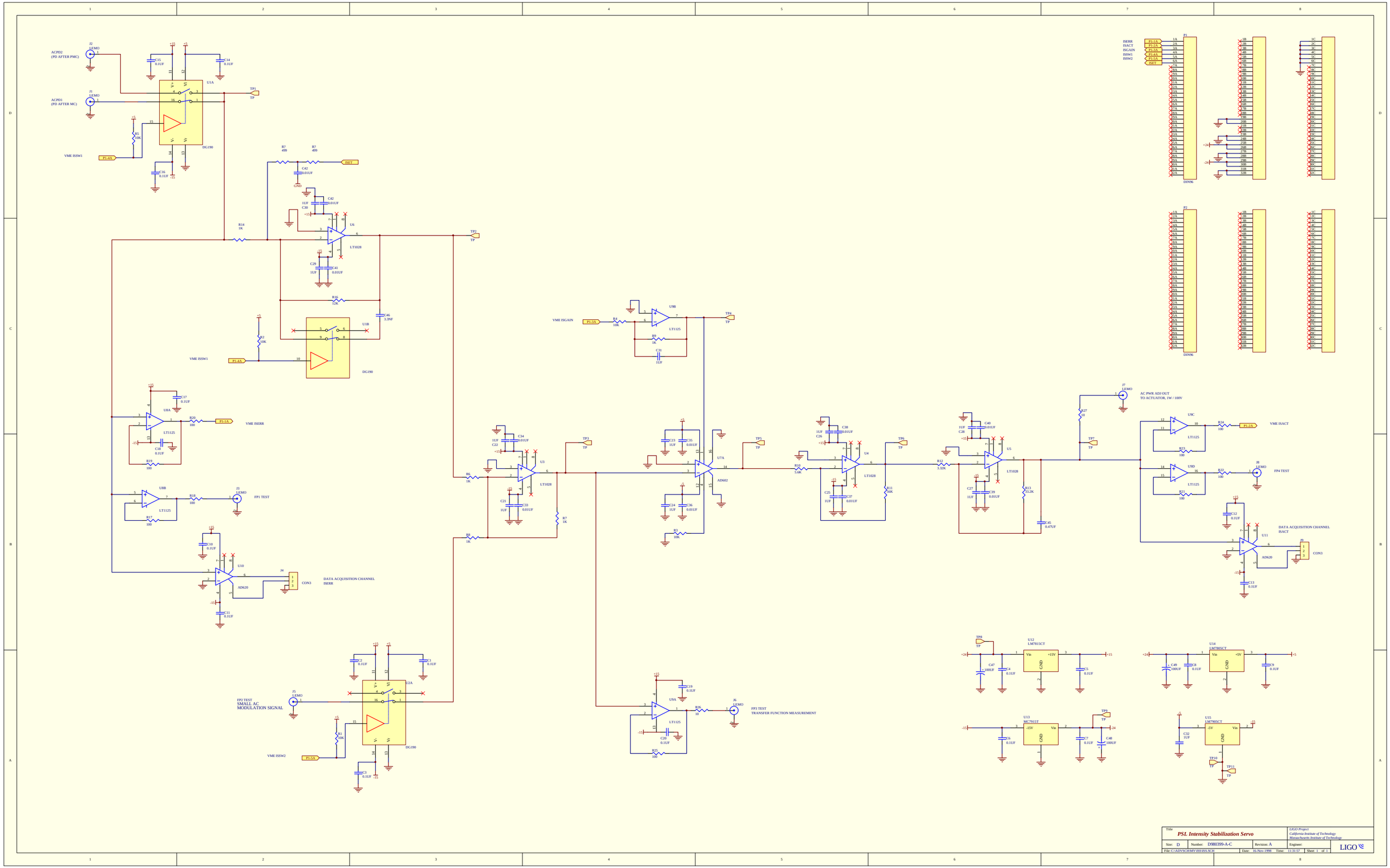

Title: **PSL Intensity Stabilization Servo**			LIGO Project California Institute of Technology Massachusetts Institute of Technology
Size: D	Number: D980399-A-C	Revision: A	Engineer:
File: C:\ADVSCHMY\ISS\ISSCH	Date: 16-Nov-1998	Time: 11:31:57	Sheet 1 of 1