Changes accomodating 9 KHz resonance

Component	Was	Is	Implements
C11	0.1UF	1UF	2 Hz pole
C12	6.8NF	47 NF	625 Hz zero
C25	0.01UF	0.1UF	10 Hz pole
C26	5.0PF	1.2NF	8.9 KHz Notch

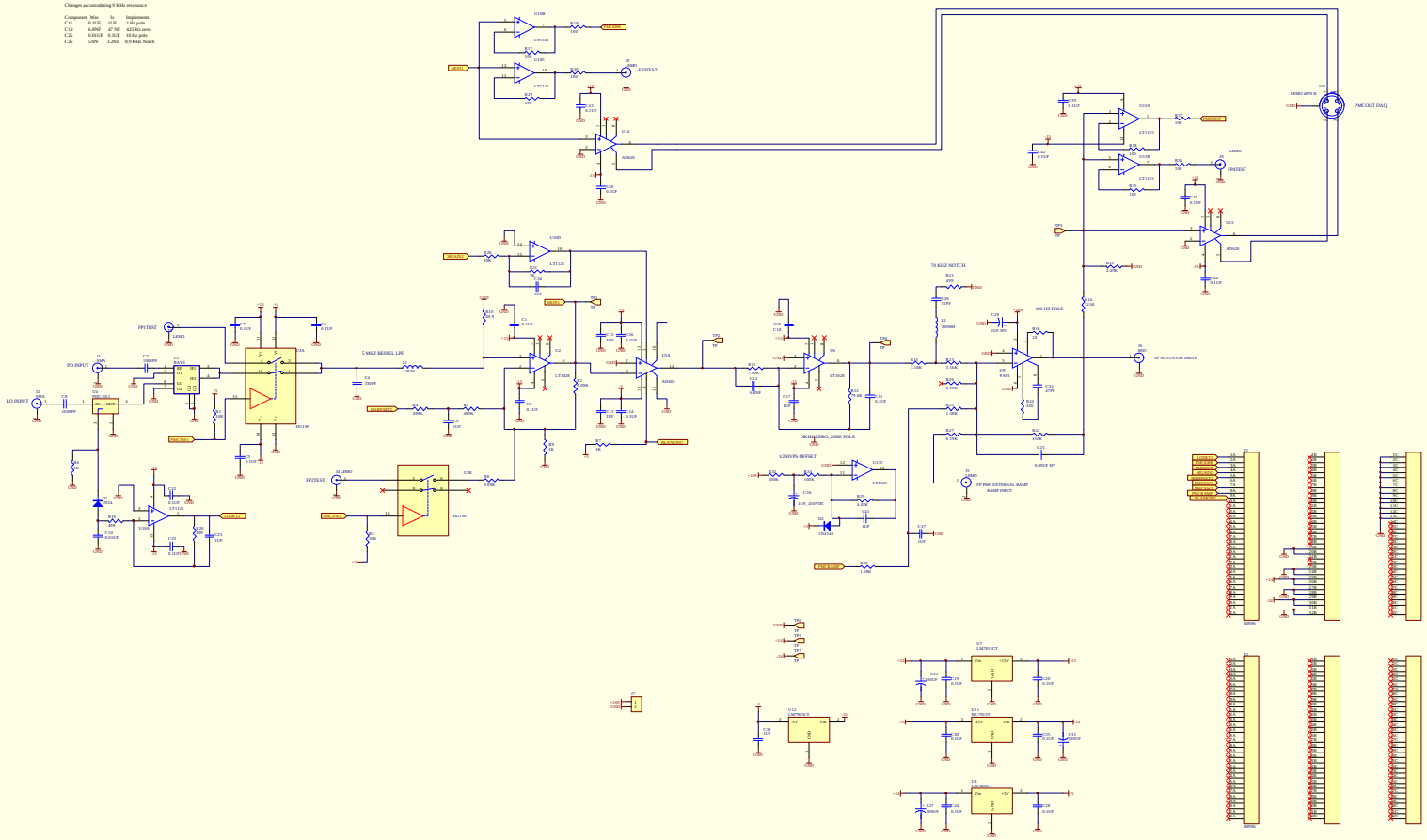

Title: *Pre Modecleaner Servo Card*			LIGO Project California Institute of Technology Massachusetts Institute of Technology
Size: D	Number: D980152-00-C	Revision: 0	Engineer: R. Abbott
File: C:\ADCS\CASCADE\PRESERVE\PRE_MODE.DWG	Date: 1 Sep 1998	Time: 10:43:18	Sheet 1 of 1

LIGO