NOTES:

1. FULL WELDED CONSTRUCTION.
2. STRESS RELIEVE BEFORE FINISH MACHINING
3. CLEAR ANODIZE PER MIL-A-8625

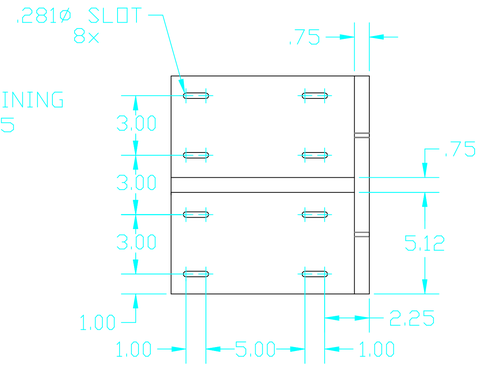

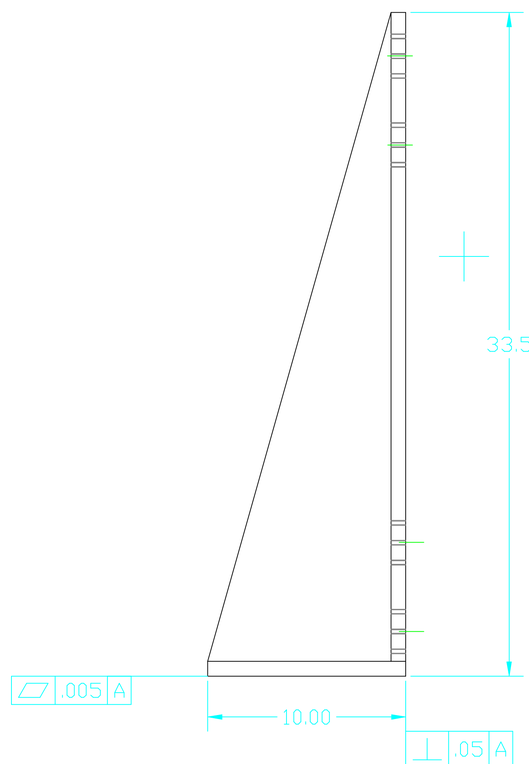

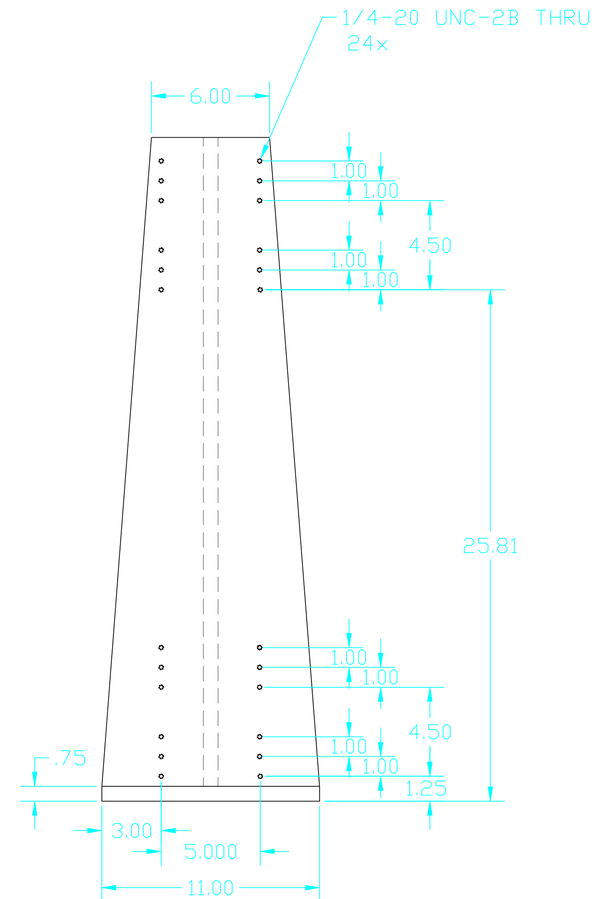

DWG. NO.	DESCRIPTION
REFERENCE DRAWINGS	

UNLESS OTHERWISE SPECIFIED
DIMENSIONS ARE IN INCHES

TOLERANCES:
FRACTIONAL ± 1/16(.12)
ANGULAR ± 1°
TWO PLACE DECIMAL ± .01(.025)
THREE PLACE DECIMAL ± .005(.013)

FINISHED SURFACE RMS 63
BREAK CORNERS IN: OUT: .02
REMOVE ALL BURRS

MATERIAL:	HEAT TREAT:	FINISH:
6061-T6 ALUMINUM	–	NONE

USED ON: – NEXT ASS'Y: –

REV	DESCRIPTION	DCC	SYS	DET	CDS	VE	CC	BT	CHECK	DRWN	DATE
A	INITIAL RELEASE									K.MASON	3/20/00
00	PRE-RELEASE									MASON	5/20/98

ISSUE DESCRIPTION

LIGO
CALIFORNIA INSTITUTE OF TECHNOLOGY
MASSACHUSETTS INSTITUTE OF TECHNOLOGY

PERISCOPE
ISC ENCLOSURE ASSEMBLY
–
–

CAD FILE	SIZE	DWG. NO.
D980329-A.DWG	D	D980329-A-D

SCALE 1:4 SHEET 1 of 1