REVISIONS			
REV.	DESCRIPTION	DATE	APPROVED
A	ASSORTED TEXT AND TOLERANCING CHANGES	4-20-98	WKM

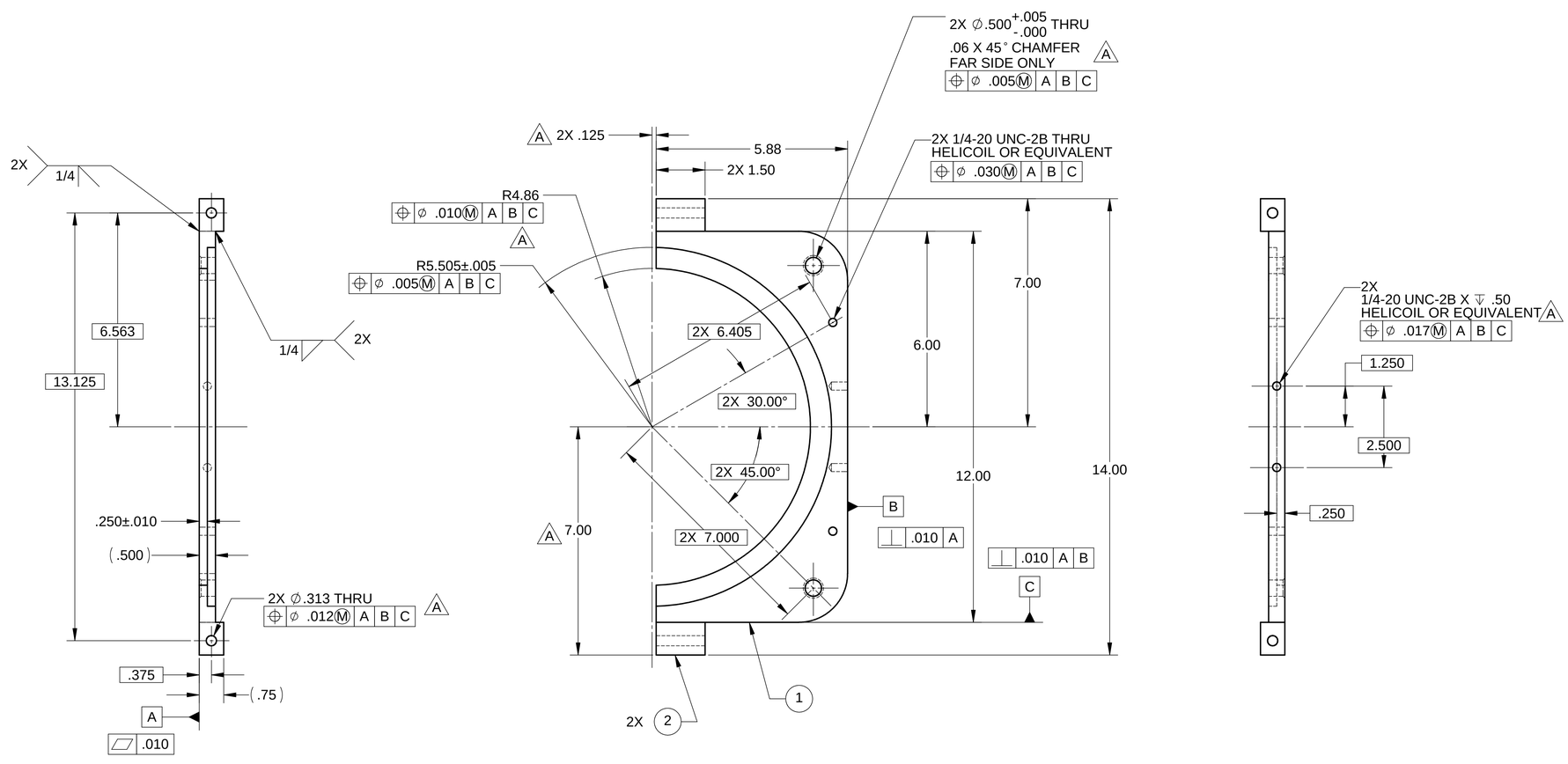

NOTES: UNLESS OTHERWISE SPECIFIED

1. ALL DIMENSIONS IN INCHES
2. DIMENSIONS AND TOLERANCING PER ASME Y14.5M-1994
3. SURFACE TEXTURE PER ANSI/ASME B 46.1-1985
4. REMOVE ALL BURRS AND BREAK SHARP EDGES TO A MAXIMUM OF .015
5. ALL INSIDE CORNERS TO BE .015 RADIUS MAX
6. COUNTERSINK 82 DEGREES ALL TAPPED HOLES TO MAJOR DIAMETER
7. COUNTERSINK 82 DEGREES APPROXIMATELY .015 DEEP ALL DRILLED HOLES
8. PART NUMBER (DRAWING NO. PLUS DASH NO. PLUS SERIAL NO.) TO BE CLEARLY MARKED ON THE PART ITSELF.
9. ALL FABRICATION, CLEANING, AND HANDLING MAINTAINED TO HYTEC SPECIFICATION LIGO-TS-03 CATEGORY 1.
10. ALL ALUM. WELDING DONE BY A GTAW PROCESS USING 2% THORIATED TUNGSTEN WELDING ELECTRODES AND ER4043 WELDING ROD (SPEC. PER AWS A5.10-80).
11. NO SULFER BASED CUTTING FLUIDS ALLOWED. APPROVED MACHINE LUBRICANT: ALUMICUT, MISTIC METAL MOVER, PRINCETON, IL.
12. PART WEIGHS 1.6 Lbs.

ITEM NO.	QTY.	DESCRIPTION	MATERIAL
1	1	PLATE, .50 THK	6061-T6 ALUM
2	2	PLATE, .75 THK	6061-T6 ALUM

PARTS LIST

UNLESS OTHERWISE SPECIFIED:
DIMENSIONS ARE IN INCHES
-TOLERANCES-
DECIMALS
.XX = +/- .03
.XXX = +/- .010
ANGULAR = +/- 30'
SURFACE FINISH = 250

CAD GENERATED DRAWING,
DO NOT MANUALLY UPDATE
DO NOT SCALE DRAWING

FINISH

	SIGNATURE	DATE
DESIGNED	W. K. MILLER	3-26-98
DRAWN	W. K. MILLER	3-26-98
CHECKED	HARRY SALAZAR	4-20-98
ENGR.	T. THOMPSON	4-20-98
APPROVED	T. THOMPSON	4-20-98

PART NO. D972970-1

HYTEC, INC

TITLE
HAM BELLOWS
COMPRESSION CLAMP
PART #3

DWG. NO. D972970 SIZE D SHEET NO. 1 of 1

SCALE 1/2 REVISION A