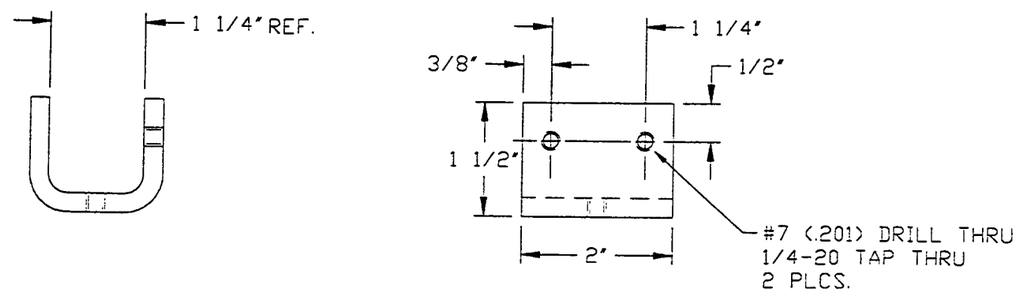

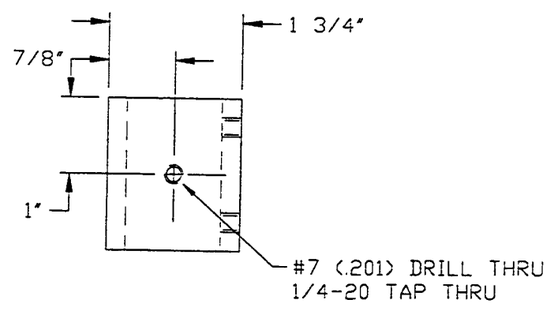

MATERIAL: 1/4" THK. X 2" W. X 4" LG. SST. 304

PROPRIETARY AND CONFIDENTIAL

THIS DOCUMENT CONTAINS PROPRIETARY INFORMATION BELONGING TO PROCESS SYSTEMS INTERNATIONAL, INC. OR ITS AFFILIATED COMPANIES AND SHALL BE USED ONLY FOR THE PURPOSE FOR WHICH IT WAS SUPPLIED. IT SHALL NOT BE COPIED, REPRODUCED OR OTHERWISE USED, NOR SHALL SUCH INFORMATION BE FURNISHED IN WHOLE OR IN PART TO OTHERS EXCEPT IN ACCORDANCE WITH THE TERMS OF ANY AGREEMENT UNDER WHICH IT WAS SUPPLIED OR WITH THE PRIOR WRITTEN CONSENT OF PROCESS SYSTEMS INTERNATIONAL, INC. AND SHALL BE RETURNED UPON REQUEST

UNLESS OTHERWISE SPECIFIED
DIMENSIONS ARE IN INCHES
TOLERANCES:
FRACTIONAL ±
ANGULARMACH ±0°-30' BEND ±2°
TWO PLACE DECIMAL ± .010
THREE PLACE DECIMAL ± .005
FINISHED SURFACE RMS
BREAK CORNERS: IN OUT
REMOVE ALL BURRS

DO NOT SCALE THIS DWG

USED ON:

NEXT ASS'Y:

REV	DESCRIPTION	CHKD	DRWN	DATE	DEC#
0	ISSUED FOR RELEASE	PRF	GS	RNL REG	BAR	11/21/96	0358

ISSUE DESCRIPTION

PROCESS SYSTEMS INTERNATIONAL INC.
20 WALKUP DR. WESTBOROUGH, MASSACHUSETTS 01581 USA

GATE VALVE FIN CLAMP

LIGO VACUUM EQUIPMENT

CAD FILE	SIZE	DWG. NO	REV
V0494163	B	V049-4-163	0

SCALE 1/2 | SHEET 1

LIGO-D970448-00-V

Nov 23, 1996 - 10:30:50