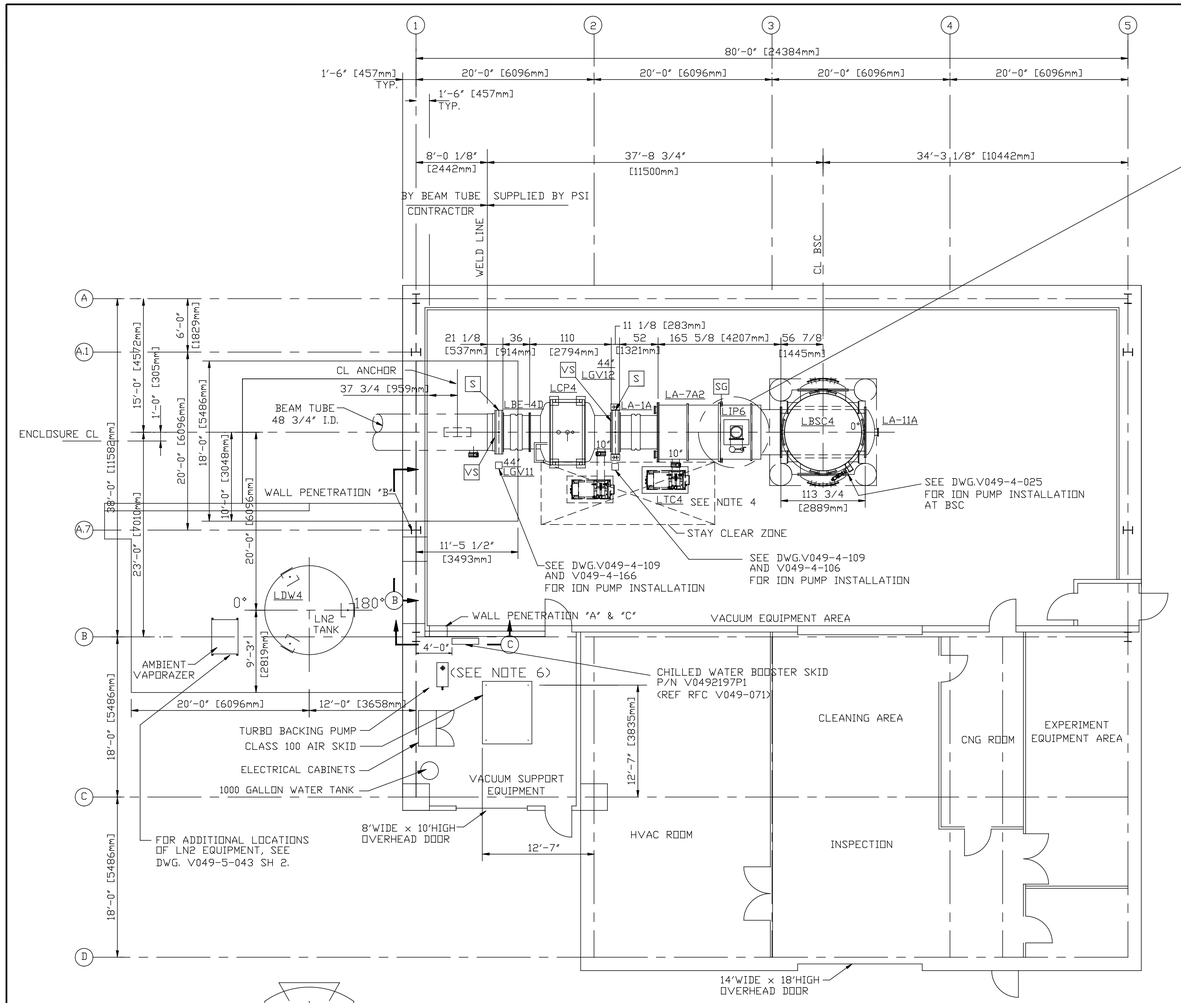

PLAN

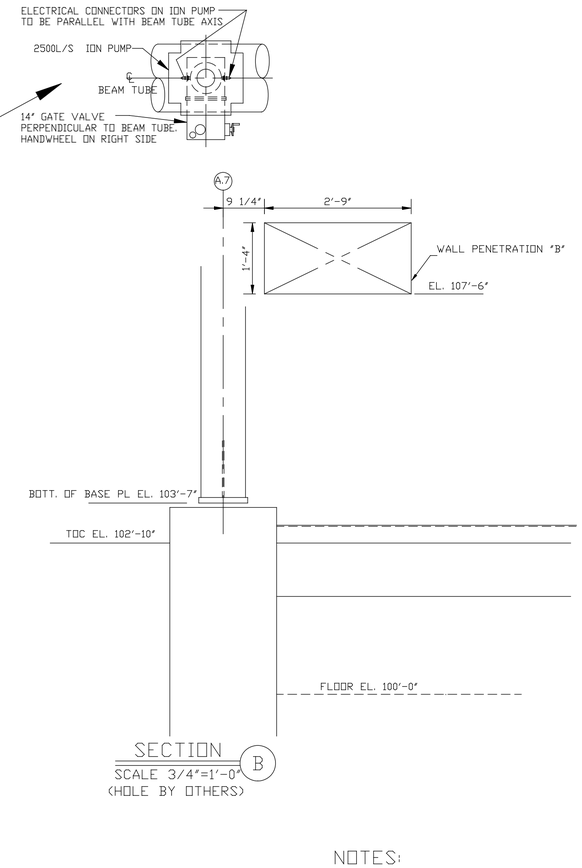

SECTION B
SCALE 3/4"=1'-0"
(HOLE BY OTHERS)

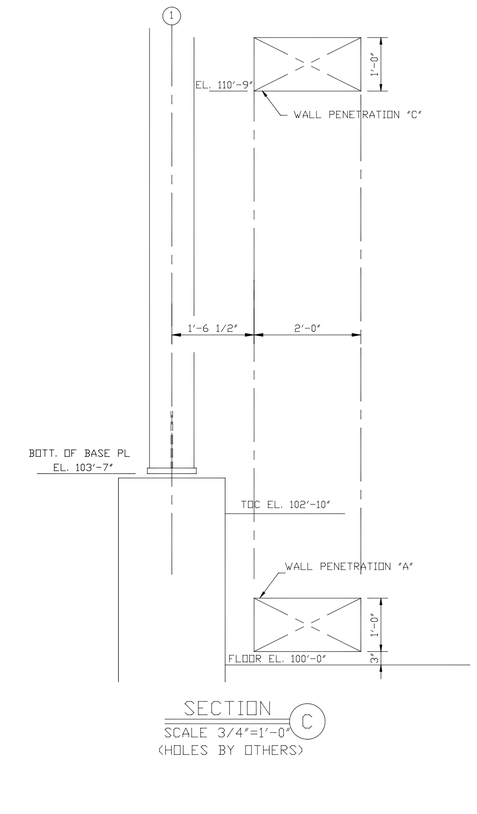

SECTION C
SCALE 3/4"=1'-0"
(HOLES BY OTHERS)

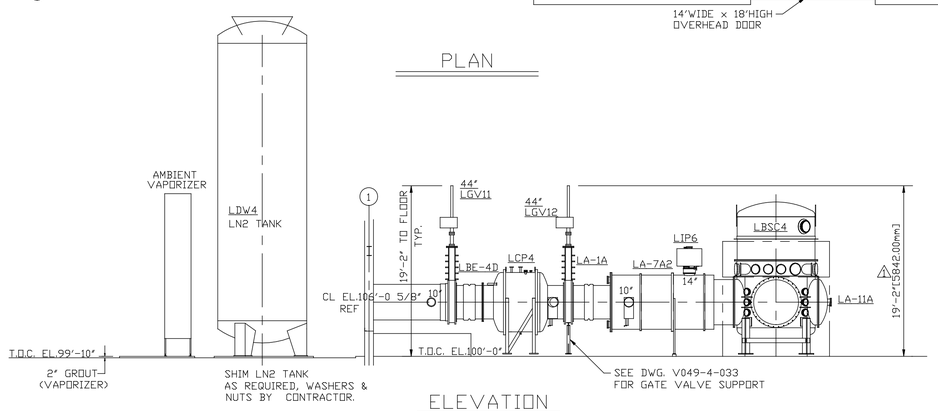

ELEVATION

LEGEND

A	3 WAY ANCHOR
SG	SUPPORT/GUIDE (AXIALLY FLEXIBLE)
S	VALVE SUPPORT
	GATE VALVE ION PUMP LOCATION
VS	VALVE SEAL SIDE

NOTES:

1. GATE VALVES SUPPLIED BY PSI.

   NOTE: SPECIAL BOLTS AND WASHERS ARE REQUIRED TO CONNECT SPOOL FLANGES TO 44" AND 48" GATE VALVES. USE PSI P/N 203567 FOR BOLTS AND PSI P/N 203568 FOR WASHERS. SEE BUILDING BOM V049800LA FOR MATERIALS. FOR ORIENTATION OF LARGE GATE VALVES SEE SIDE OF VALVE NOTED BY SYMBOL "VS" IN PLAN BELOW. ALL 6", 10", & 14" GATE VALVES ARE TO HAVE SEAL SIDE MOUNTED TOWARD VESSEL.
2. SEE SPEC. V049-2-025 FOR INSTALLATION/ COMMISSIONING INFORMATION.
3. FOR TUBING/ PIPE SUPPORT REQUIREMENTS, SEE SPEC. V049-2-025 SECTION 10.
4. SEE DWG. DV049-4-010 FOR TURBO CART INSTALLATION.
5. LN2 TANK ANCHOR BOLTS INSTALLED BY OTHERS.
6. FOR ANCHOR BOLTS AND VIBRATION ISOLATION PAD REQUIREMENTS FOR VACUUM SUPPORT ROOM EQUIP. & ELECTRICAL CABINETS SEE DWG. V049-5-032, DETAIL #2.
7. ORIENTATION OF BSC IS TO HAVE 0° CENTERLINE POSITIONED AS SHOWN.

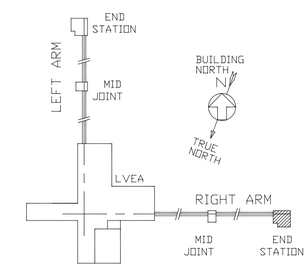

KEY PLAN

PROPRIETARY AND CONFIDENTIAL

THIS DOCUMENT CONTAINS PROPRIETARY INFORMATION BELONGING TO PROCESS SYSTEMS INTERNATIONAL, INC. OR ITS AFFILIATED COMPANIES AND SHALL BE USED ONLY FOR THE PURPOSE FOR WHICH IT WAS SUPPLIED. IT SHALL NOT BE COPIED, REPRODUCED OR OTHERWISE USED, NOR SHALL SUCH INFORMATION BE FURNISHED IN WHOLE OR IN PART TO OTHERS EXCEPT IN ACCORDANCE WITH THE TERMS OF ANY AGREEMENT UNDER WHICH IT WAS SUPPLIED OR WITH THE PRIOR WRITTEN CONSENT OF PROCESS SYSTEMS INTERNATIONAL, INC. AND SHALL BE RETURNED UPON REQUEST.

DWG. NO.	DESCRIPTION
V049-2-036	OVER ALL FLANGE ARRANGEMENT
V049-2-025	SPEC. FOR INSTALLATION & COMMISSIONING
V049-0-001	P & ID LIGO VACUUM EQUIPMENT
LA-A-202	PARSONS ARCHITECTURAL END STATIONS FLOOR PLAN
1101102	LIGO VACUUM EQUIPMENT END STATION

REFERENCE DRAWINGS

UNLESS OTHERWISE SPECIFIED
DIMENSIONS ARE IN INCHES
TOLERANCES:
FRACTIONAL ±
ANGULARMACH ±0 BEND ±
TWO PLACE DECIMAL ±
THREE PLACE DECIMAL ±
FINISHED SURFACE RMS
BREAK CORNERS IN- OUT-
REMOVE ALL BURRS

DO NOT SCALE THIS DRAWING

USED ON:

NEXT ASS'Y:

REV	DESCRIPTION					CHKD	DRWN	DATE	DEO#
3	AS BUILT						CS	01/08/99	0640
2	ISSUED FOR CONSTRUCTION				RDC	REC	RM	1/26/98	0592
1	ISSUED FOR FDR UPDATE / CONSTRUCTION				RDC	REC	REC	12/15/97	0498
0	ISSUED FOR FDR		SM	DMW	RDC	REC	RM	1.13.97	0406

ISSUE DESCRIPTION

PROCESS SYSTEMS INTERNATIONAL INC.
20 WALKUP DR. WESTBOROUGH, MASSACHUSETTS 01581 USA

EQUIPMENT ARRANGEMENT
RIGHT END STATION AREA 800
LOUISIANA
LIGO VACUUM EQUIPMENT

CAD FILE	SIZE	DWG. NO.	REV.
V0495008	D	V049-5-008	3

SCALE 1/8"=1'-0" SHEET 1 OF 1