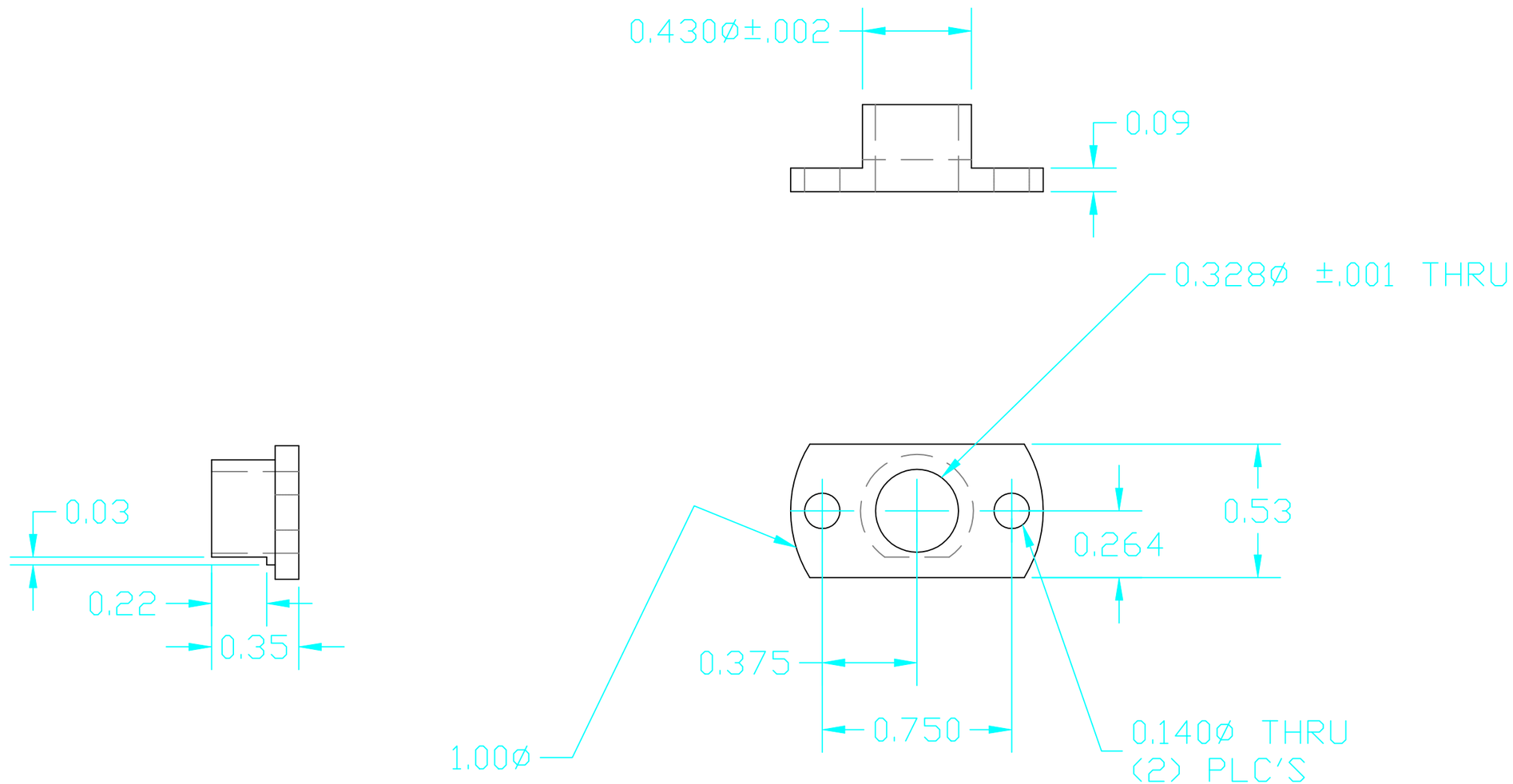


UNLESS OTHERWISE SPECIFIED
DIMENSIONS ARE IN INCHES

TOLERANCES:
FRACTIONAL ±1/16(.16)
ANGULAR ± 1°
TWO PLACE DECIMAL ±.01(.025)
THREE PLACE DECIMAL ±.005(.013)

FINISHED SURFACE RMS 63
BREAK CORNERS IN: OUT: .02
REMOVE ALL BURRS

| MATERIAL: | HEAT TREAT: | FINISH: |
|---|---|---|
| WHITE DELRIN | – | NONE |

USED ON: D970156-00-D
NEXT ASS'Y: –

| DWG. NO. | DESCRIPTION |
|---|---|
| REFERENCE DRAWINGS | |

| REV | DESCRIPTION | DCC | SYS | DET | CDS | VE | CC | BT | CHECK | DRWN | DATE |
|---|---|---|---|---|---|---|---|---|---|---|---|
| A | INITIAL RELEASE | | | | | | | | | MASON | 5/98 |
| 00 | PRE-RELEASE | | | | | | | | | K.MASON | 5/5/97 |

ISSUE DESCRIPTION

LIGO
CALIFORNIA INSTITUTE OF TECHNOLOGY
MASSACHUSETTS INSTITUTE OF TECHNOLOGY

PHOTODETECTOR PORT
POSITION DETECTOR ASSY.
OPTICAL LEVER
–

| CAD FILE | SIZE | DWG. NO. |
|---|---|---|
| D970160-A.DWG | B | D970160-A-D |
| SCALE 2:1 | | SHEET 1 OF 1 |