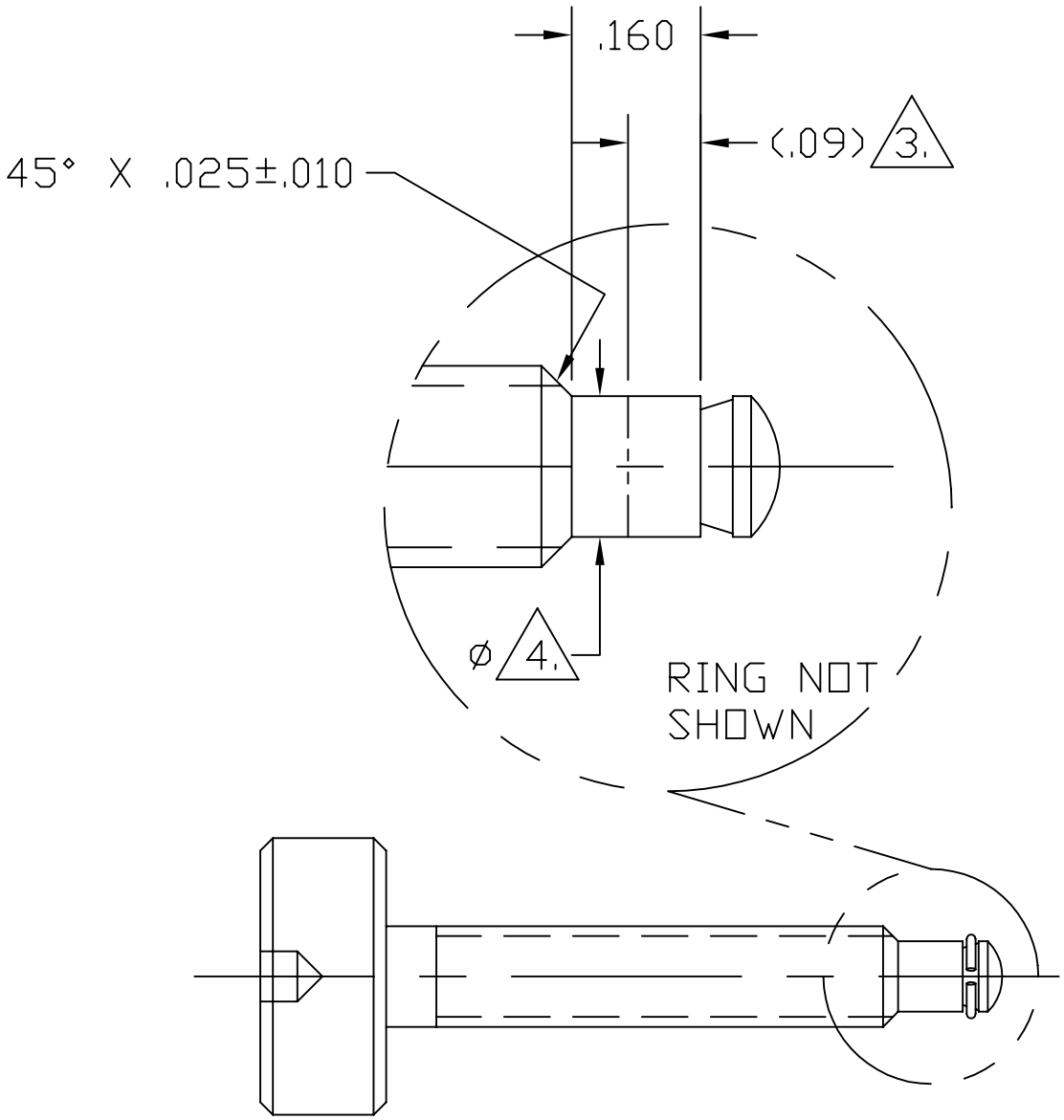

NOTES: (UNLESS OTHERWISE SPECIFIED)

1. MAKE FROM NORTHWESTERN TOOLS #44101 TOGGLE SCREW, CRES 303 SPECIAL. FOR VENDOR INFORMATION SEE TOP ASSEMBLY MATERIALS LIST D970006 OR D970007.
2. THIS DRAWING MODIFIES THE THREAD REMOVED LENGTH AT THE SCREW END ON THE EXISTING PART.
3. THREAD REMOVED LENGTH OF EXISTING PART.
4. MATCH DIAMETER WITH EXISTING THREAD REMOVED SECTION TO WITHIN .000-.003 OVER-SIZE.
5. SILVER PLATE THREADED PORTION PER QQ-S-365.

UNLESS OTHERWISE SPECIFIED
DIMENSIONS ARE IN INCHES

TOLERANCES:
FRACTIONAL ±
ANGULAR ± 0.5°
ANGULARMACH ± BEND ±
TWO PLACE DECIMAL ± .03

THREE PLACE DECIMAL ± .005
FINISHED SURFACE 63 MICROINCH AVERAGE
BREAK CORNERS IN: OUT:
REMOVE ALL BURRS

MATERIAL: 1.
HEAT TREAT:
FINISH: 5.
USED ON:
NEXT ASS'Y:

REV	DESCRIPTION	DCC	SYS	DET	CDS	VE	CC	BT	CHECK	DRWN	DATE
A	DCN E960157										
00	RELEASE FOR FAB									CONLEY	01-16-97

ISSUE DESCRIPTION

LIGO CALIFORNIA INSTITUTE OF TECHNOLOGY
MASSACHUSETTS INSTITUTE OF TECHNOLOGY

CORE OPTIC COMPONENT CARRIER
TOGGLE SCREW, MODIFIED

CAD FILE: D970005-A.dwg
SIZE: A
DWG. NO.: D970005-A-D
SCALE: NTS
SHEET: 1 OF 1