NOTES: (UNLESS OTHERWISE SPECIFIED)

1. MARK SERIAL NUMBER APPROX. WHERE SHOWN BY ENGRAVING, DIE STAMPING, OR OTHER PERMANENT METHOD, 1/4 INCH HIGH LETTERING.
2. FOR VENDOR INFORMATION, SEE TOP ASSEMBLY MATERIALS LIST D970006 OR D970007.

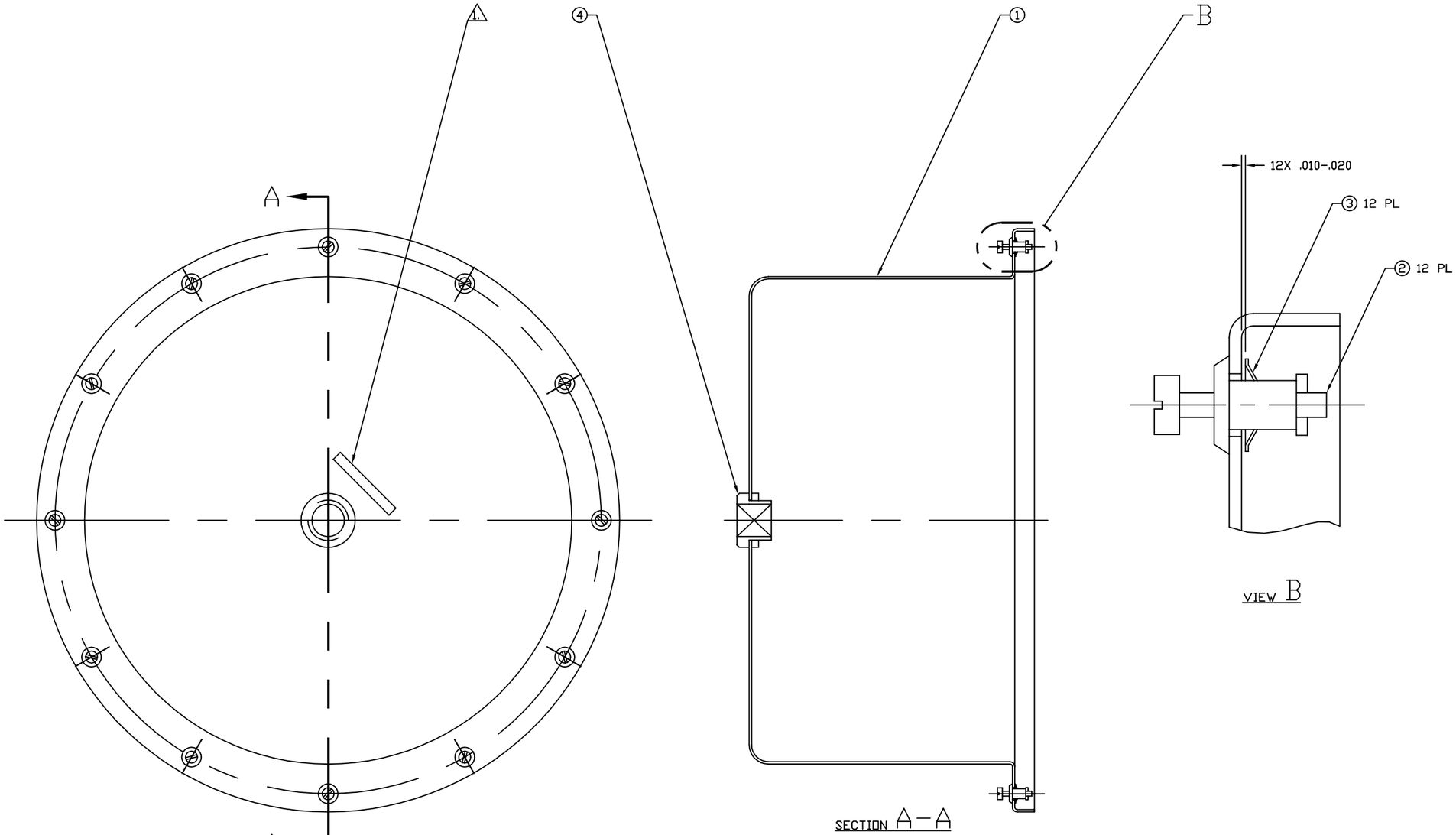

REF.	QTY.	PART or DRWG No.	NOMENCLATURE or DESCRIPTION	MATERIAL
4	1	ZERO MFG. #ZSP 6-037-4	PRESSURE RELIEF VALVE	ALUM
3	12	CAMLOCK PROD'S. DIV #2600-LW-7	QUARTER TURN FASTENER RETAINING RING	SS
2	12	CAMLOCK PROD'S. DIV #26S51-5	QUARTER TURN FASTENER STUD	SS
1	1	D961416	COVER	-

PARTS and MATERIAL LIST 2.

DWG. NO.	DESCRIPTION
REFERENCE DRAWINGS	

UNLESS OTHERWISE SPECIFIED
DIMENSIONS ARE IN INCHES

TOLERANCES:
FRACTIONAL ±
ANGULAR ±
ANGULARMACH ± BEND ±
TWO PLACE DECIMAL ±
THREE PLACE DECIMAL ±
FINISHED SURFACE
BREAK CORNERS IN OUT:
REMOVE ALL BURRS

MATERIAL: HEAT TREAT: FINISH:

USED ON: NEXT ASS'Y: D961460/D961461

REV	DESCRIPTION	DCC	SYS	DET	CDS	VE	CC	BT	CHECK	DRWN	DATE
B	DCN E970061								CDYNE	CONLEY	5-7-97
A	DCN E960157								CDYNE	CONLEY	2-14-97
01	RELEASE FOR FAB									CONLEY	
pA	PRELIMINARY RELEASE									CONLEY	
00	PRE-RELEASE									CONLEY	12-11-96

ISSUE DESCRIPTION

LIGO CALIFORNIA INSTITUTE OF TECHNOLOGY
MASSACHUSETTS INSTITUTE OF TECHNOLOGY

CORE OPTIC COMPONENT CARRIER
COVER ASSEMBLY

CAD FILE: D961419-B.dwg
SIZE: B
DWG. NO.: D961419-B-D
SCALE: NTS
SHEET: 1 OF 1