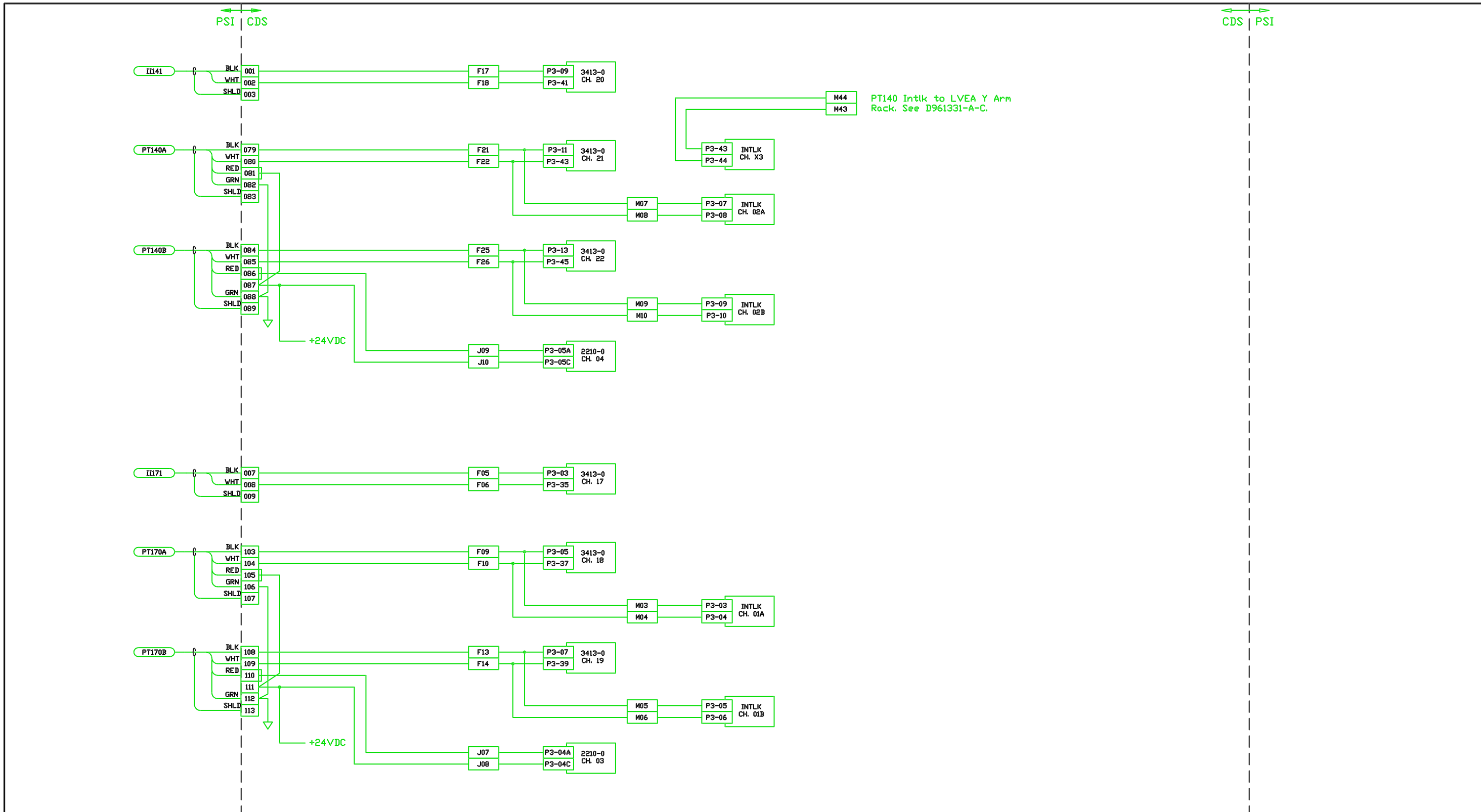

DWG. NO.	DESCRIPTION	DWG. NO.	DESCRIPTION
REFERENCE DRAWINGS			

UNLESS OTHERWISE SPECIFIED
DIMENSIONS ARE IN INCHES
TOLERANCES:
FRACTIONAL ±
ANGULAR:MACH ± BEND ±
TWO PLACE DECIMAL ±
THREE PLACE DECIMAL ±
FINISHED SURFACE RMS
BREAK CORNERS IN: OUT:
REMOVE ALL BURRS

DO NOT SCALE THIS DRAWING
USED ON:
NEXT ASS'Y:

REV	DESCRIPTION	SHEETS EFFECTED	DATE
A	Initial Release per ECN E970001-00-C		1/3/97

ISSUE DESCRIPTION

CURRENT REVISION APPROVAL

DRAWN	GROUP	SIGNATURE	DATE
TONY T.	CDS		10-1-96
CHECKED R. Bork			
	DCC		

LIGO CALIFORNIA INSTITUTE OF TECHNOLOGY MASSACHUSETTS INSTITUTE OF TECHNOLOGY

VCMS ELECTRICAL DIAGRAM
WA LVEA X ARM
WBSC-4 & WBSC7

SCALE	SIZE	DWG. NO.	REV.
-	B	D961323-A-C	00
CAD FILE 1323S1C0		SHEET 1 OF 1	VER. 01

1323S1C0
12-27-96 - 16:21