NOTES:

1) Not all terminal block connections are shown; see LVEA drawing set for detailed connections.
2) Switches S4 and S5 should be set with switch lever to **front** of module.
3) Relays 6 is not used/connected.
4) Comparators A, C, E, G are connected to Pirani gauges; thresholds should be set to 400mV.
5) Comparators B, D, F, H are connected to cold cathode gauges; thresholds should be set to 6V.

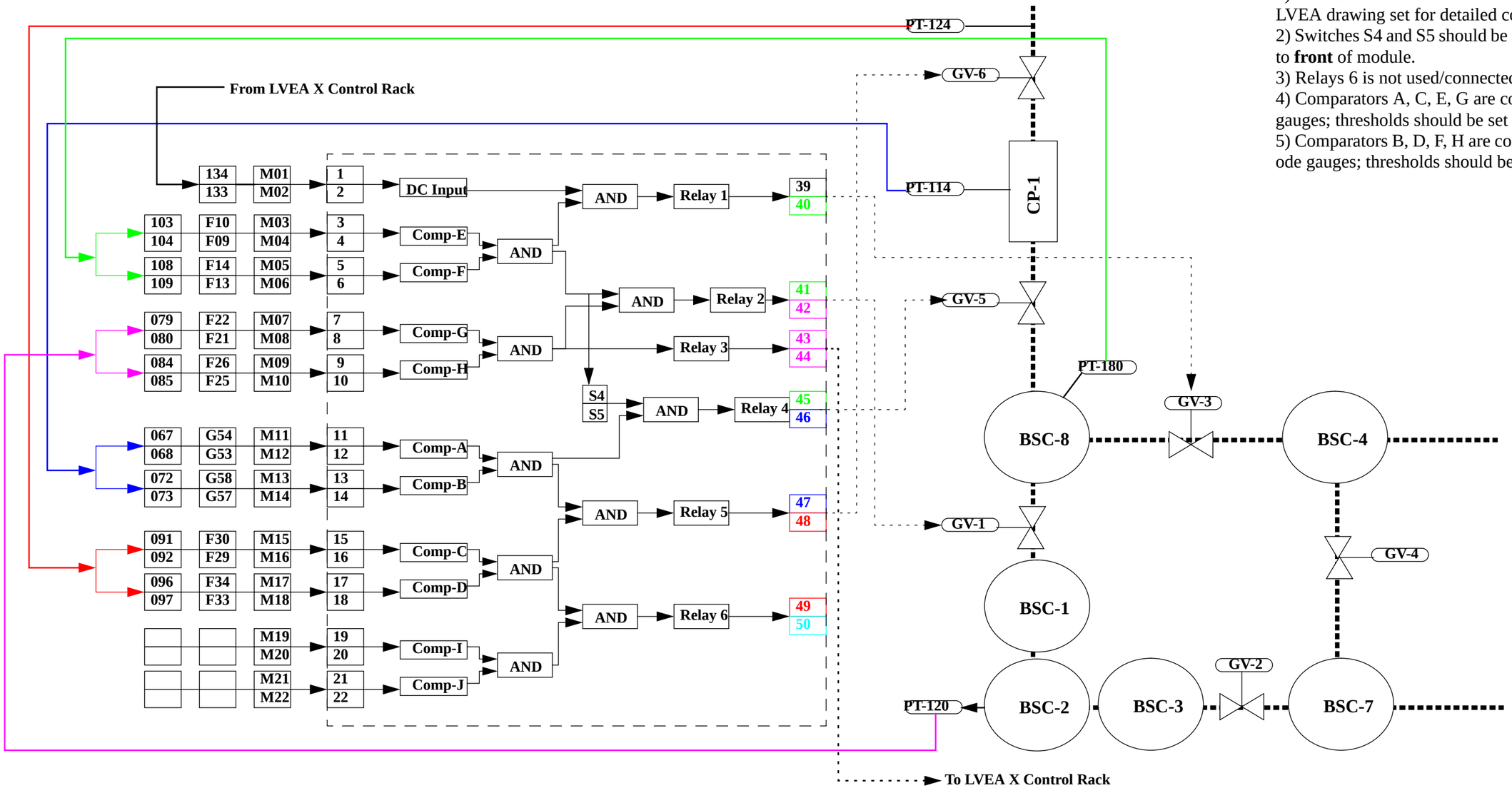

DWG. NO.	DESCRIPTION	DWG. NO.	DESCRIPTION
REFERENCE DRAWINGS			

UNLESS OTHERWISE SPECIFIED
DIMENSIONS ARE IN INCHES
TOLERANCES:
FRACTIONAL ±
ANGULAR:MACH ± BEND ±
TWO PLACE DECIMAL ±
THREE PLACE DECIMAL ±
FINISHED SURFACE RMS
BREAK CORNERS IN: OUT:
REMOVE ALL BURRS

DO NOT SCALE THIS DRAWING
USED ON:
NEXT ASS'Y:

REV	DESCRIPTION	SHEETS EFFECTED	DATE
	Initital Release per ECN E970001-00-C		

ISSUE DESCRIPTION

CURRENT REVISION APPROVAL

		GROUP	SIGNATURE	DATE
DRAWN	R. Bork			
CHECKED				
		DCC		

LIGO CALIFORNIA INSTITUTE OF TECHNOLOGY
MASSACHUSETTS INSTITUTE OF TECHNOLOGY

VCMS Electrical Diagram
WA LVEA Y Arm
GV Interlock Module Connections

SCALE	SIZE	DWG. NO.	REV.
	B	D961317-A-C	
CAD FILE / SCALE	SHEET / STD		VER. D1