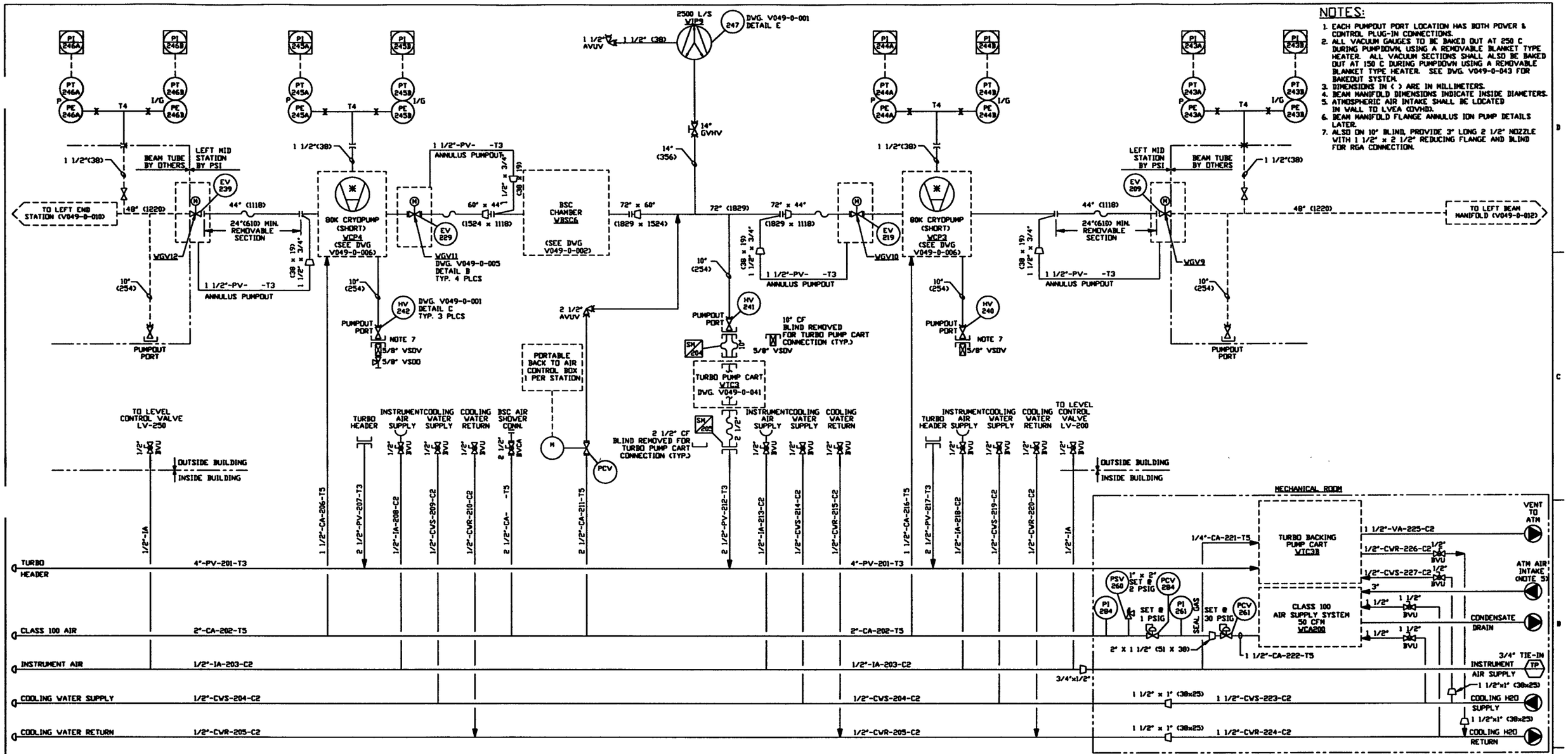

NOTES:

1. EACH PUMPOUT PORT LOCATION HAS BOTH POWER & CONTROL PLUG-IN CONNECTIONS.
2. ALL VACUUM GAUGES TO BE BAKED OUT AT 250 C DURING PUMPDOWN, USING A REMOVABLE BLANKET TYPE HEATER. ALL VACUUM SECTIONS SHALL ALSO BE BAKED OUT AT 150 C DURING PUMPDOWN USING A REMOVABLE BLANKET TYPE HEATER. SEE DWG. V049-0-043 FOR BAKEOUT SYSTEM.
3. DIMENSIONS IN ( ) ARE IN MILLIMETERS.
4. BEAM MANIFOLD DIMENSIONS INDICATE INSIDE DIAMETERS.
5. ATMOSPHERIC AIR INTAKE SHALL BE LOCATED IN WALL TO LVEA (OVHD).
6. BEAM MANIFOLD FLANGE ANNULUS ION PUMP DETAILS LATER.
7. ALSO ON 10" BLIND, PROVIDE 3" LONG 2 1/2" NOZZLE WITH 1 1/2" x 2 1/2" REDUCING FLANGE AND BLIND FOR RGA CONNECTION.

LIGO D961076-01-V

PROPRIETARY AND CONFIDENTIAL
THIS DOCUMENT CONTAINS PROPRIETARY INFORMATION BELONGING TO PROCESS SYSTEMS INTERNATIONAL, INC. OR ITS AFFILIATED COMPANIES AND SHALL BE USED ONLY FOR THE PURPOSE FOR WHICH IT WAS SUPPLIED. IT SHALL NOT BE COPIED, REPRODUCED OR OTHERWISE USED, NOR SHALL SUCH INFORMATION BE FURNISHED IN WHOLE OR IN PART TO OTHERS EXCEPT IN ACCORDANCE WITH THE TERMS OF ANY AGREEMENT UNDER WHICH IT WAS SUPPLIED OR WITH THE PRIOR WRITTEN CONSENT OF PROCESS SYSTEMS INTERNATIONAL, INC. AND SHALL BE RETURNED UPON REQUEST.

DWG. NO.	DESCRIPTION	DWG. NO.	DESCRIPTION
V049-0-041	P & ID TURBO PUMP CART		
V049-0-012	P & ID LEFT BEAM MANIFOLD		
V049-0-010	P & ID LEFT END STATION		
V049-0-006	P & ID 80K CRYOPUMP		
V049-0-002	P & ID BEAM SPLITTER CHAMBER		
V049-0-001	P & ID LEGEND		

REFERENCE DRAWINGS

EQUIP. THIS DWG.
VGV12 VTC3
VCP4
VGV11
VBSC6
VIP9
VGV10
VCP3
VGV9

UNLESS OTHERWISE SPECIFIED
DIMENSIONS ARE IN INCHES
TOLERANCES:
FRACTIONAL ±
ANGULAR:MACH ±0°-30' BEND ±2°
TWO PLACE DECIMAL ± .01
THREE PLACE DECIMAL ± .005
FINISHED SURFACE RMS
BREAK CORNERS ON OUT:
REMOVE ALL BURRS

DO NOT SCALE THIS DRAWING
USED ON:
NEXT ASS'Y:

REV	DESCRIPTION					CHKD	DRWN	DATE	DEO#
1	ISSUED FOR FDR	REB	TS	RT	SM	DMW	RW	04.26.96	0134
0	ISSUE FOR DESIGN	REB	TMS	RT	SM	DMW	RW	01.03.96	0031
P1	PRELIMINARY DESIGN UPDATE	REB					AFG	09.26.95	0003

ISSUE DESCRIPTION

PROCESS SYSTEMS INTERNATIONAL INC.
20 WALKUP DR. WESTBOROUGH, MASSACHUSETTS 01581 USA

PIPING & INSTRUMENTATION DIAGRAM
LIGO VACUUM EQUIPMENT
WASHINGTON SITE
LEFT MID STATION

CAD FILE	SIZE	DWG. NO.	REV.
V0490011	D	V049-0-011	1

SCALE NONE
SHEET 1 OF 1

Apr 26, 1996 - 08:44:11