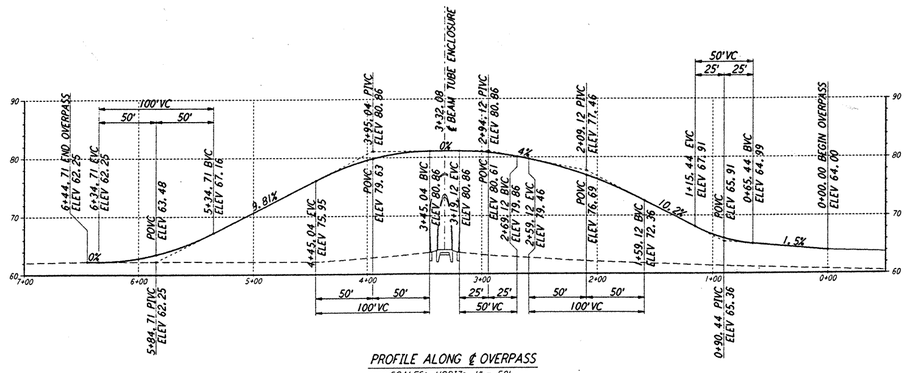

PROFILE ALONG ℄ OVERPASS
SCALES: HORIZ: 1" = 50'
VERT: 1" = 10'

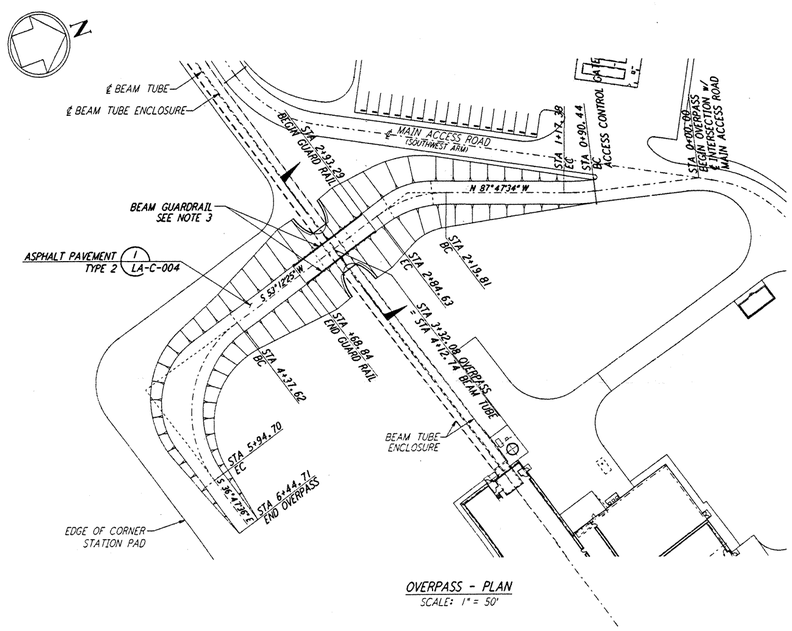

OVERPASS - PLAN
SCALE: 1" = 50'

OVERPASS (1) LA-C-053
NOT TO SCALE

REF
LA-C-005
LA-C-006
LA-C-007

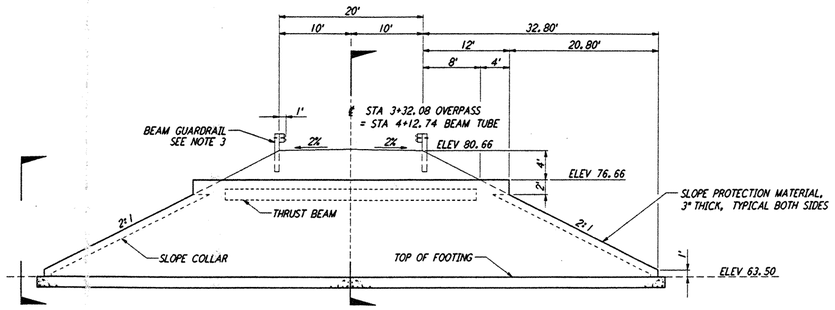

LONGITUDINAL SECTION THRU ℄ ARCH STRUCTURE

NOTES:

1. SEE SHEET LA-C-002 FOR GENERAL NOTES, LEGEND AND ABBREVIATIONS.
2. SEE SHEET LA-C-005 FOR OVERPASS CURVE DATA.
3. BEAM GUARDRAIL SHALL BE "W-BEAM" WITH WOOD OR STEEL POST ASSEMBLY IN ACCORDANCE WITH LOUISIANA STATE DEPARTMENT OF TRANSPORTATION AND DEVELOPMENT STANDARD PLANS.

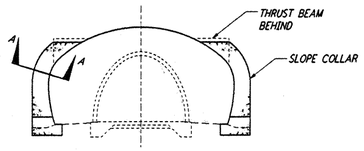

FRONT VIEW - ARCH STRUCTURE

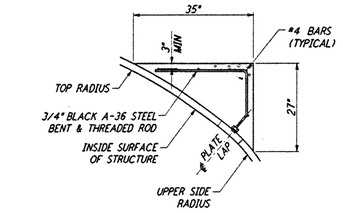

THRUST BEAM DETAIL

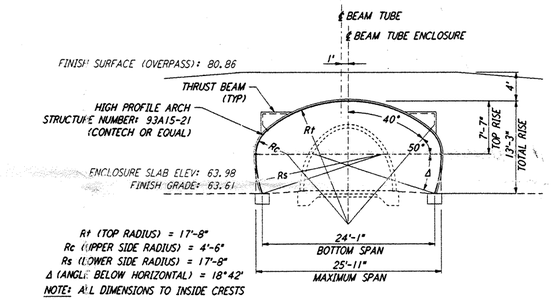

R1 (TOP RADIUS) = 17'-8"
Rc (UPPER SIDE RADIUS) = 4'-6"
Rs (LOWER SIDE RADIUS) = 17'-8"
Δ (ANGLE BELOW HORIZONTAL) = 18°42'
NOTE: ALL DIMENSIONS TO INSIDE CRESTS

SECTION THRU ARCH STRUCTURE

NOTE: ARCH STRUCTURE SHALL BE IN ACCORDANCE WITH "CONTECH" REQUIREMENTS OR EQUAL.

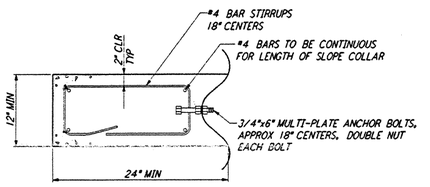

SECTION A-A
TYPICAL SLOPE COLLAR

NOTES: (STEEL LONG SPAN STRUCTURES)

1. THE LONG SPAN STEEL STRUCTURAL PLATE STRUCTURE, CONFORMING TO THE DIMENSIONS SHOWN ON THE PLANS AND SPECIFICATIONS, SHALL BE DESIGNED AND INSTALLED BY THE CONTRACTOR AT THE LOCATION DESIGNATED. THE DESIGN AND INSTALLATION SHALL CONFORM TO AASHTO STANDARD SPECIFICATIONS FOR HIGHWAY BRIDGES, DIVISION I, "SOIL-CORRUGATED METAL STRUCTURE INTERACTION SYSTEMS", SECTION 12.7, "LONG SPAN STRUCTURAL PLATE STRUCTURES", AND DIVISION II, SECTION 26, "METAL CULVERTS" AND DIVISION II, SECTION 8, "CONCRETE STRUCTURES". THE DESIGN SHALL BE FOR STANDARD H20 LOADING WITH CONSIDERATION FOR CORROSION AND DURABILITY INCLUDED.
2. THE GALVANIZED STEEL STRUCTURAL PLATE SHALL HAVE 6" x 2" CORRUGATIONS AND SHALL BE 8 GAGE MINIMUM THICKNESS. THE PLATES SHALL BE MANUFACTURED IN CONFORMANCE WITH AASHTO SPECIFICATION M 167. BOLTS AND NUTS SHALL MEET THE PROVISIONS OF ASTM A 449 AND ASTM A 563, GRADE C, RESPECTIVELY, AND SHALL BE GALVANIZED IN ACCORDANCE WITH THE REQUIREMENTS OF ASTM A 153, CLASS C. THE STEEL ANCHOR BOLTS SHALL CONFORM TO ASTM 307, GRADE A.
3. LONGITUDINAL STIFFENERS SHALL BE LOCATED AT THE RADIUS TRANSITION AT THE ENDS OF THE TOP ARC. THE THRUST BEAMS SHALL CONSIST OF REINFORCED CONCRETE CONFORMING TO DIVISION II, SECTION 8, CLASS B OF THE AASHTO STANDARD SPECIFICATIONS FOR HIGHWAY BRIDGES HAVING A MINIMUM COMPRESSION STRENGTH OF 2400 PSI. REINFORCING STEEL SHALL CONFORM TO ASTM A 615, GRADE 40, HAVING A MINIMUM YIELD STRENGTH OF 40,000 PSI. THRUST BEAMS SHALL BE FORMED AND POURED CONFORMING TO THE PLAN DIMENSIONS WHEN THE BACKFILL REACHES THE BOTTOM ELEVATION OF THE THRUST BEAMS.
4. THE LONG SPAN STRUCTURE SHALL BE DESIGNED IN ACCORDANCE WITH THE LATEST AASHTO DESIGN CRITERIA AND SHALL BE REQUIRED TO INCORPORATE THE USE OF CONTINUOUS LONGITUDINAL STRUCTURAL STIFFENERS (CONCRETE THRUST BEAMS). THE MATERIAL SUPPLIER SHALL BE A QUALIFIED MANUFACTURER OF STEEL STRUCTURAL PLATE AND LONG SPAN STRUCTURES WITH A MINIMUM OF 50 SUCCESSFUL INSTALLATIONS. THE FOUNDATION, STRUCTURAL BACKFILL AND END TREATMENT SHALL BE AS REQUIRED HEREIN AND DETAILED ON THE PLANS.
5. THE STRUCTURE SHALL BE ERECTED IN STRICT ACCORANCE WITH THE MANUFACTURER'S INSTRUCTIONS AND TO THE DESIGN SHAPE SHOWN ON THE PLANS. PLATES SHALL BE ASSEMBLED ACCORDING TO PLATE ASSEMBLY DRAWINGS SUPPLIED BY THE MANUFACTURER.
6. BACKFILL SHALL BE IN ACCORDANCE WITH AASHTO SPECIFICATION M-145, GRADE A-1-a, AND COMPACTED PER MANUFACTURERS RECOMMENDATIONS.
7. THE MANUFACTURER SHALL SUPPLY A QUALIFIED REPRESENTATIVE TO MONITOR THE INSTALLATION AND BACKFILLING OF THE STRUCTURE.
8. APPROPRIATE LIGHT WEIGHT EQUIPMENT SHALL BE USED TO FILL AND COMPACT AROUND STRUCTURE IN ACCORDANCE WITH MANUFACTURER'S RECOMMENDATIONS.
9. THE PREVIOUS ROUGH GRADING CONTRACTOR HAS COMPACTED THE FILL TO 96% OF MAXIMUM DRY DENSITY AS MEASURED BY ASTM D-1557. THE GEOTECHNICAL ENGINEER HAS ESTIMATED AN ALLOWABLE BEARING PRESSURE OF 2000 PSI FOR COMPACTED FILL SOILS.
10. CONTRACTOR SHALL SUBMIT DESIGN FOR REVIEW PRIOR TO CONSTRUCTION OF ARCH STRUCTURE.
11. THE LONG SPAN STEEL STRUCTURE AND FOUNDATION SHALL BE DESIGNED BY A LICENSED ENGINEER IN THE STATE OF LOUISIANA.

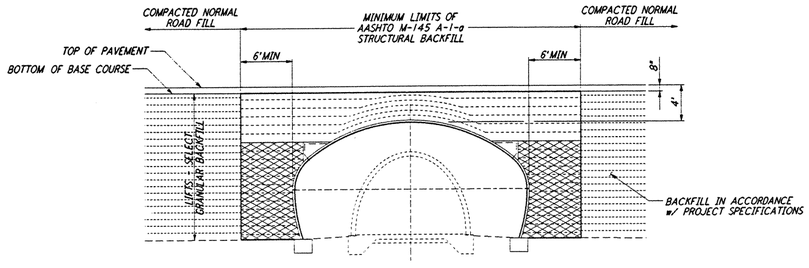

BACKFILL REQUIREMENTS FOR ARCH STRUCTURE

GRAPHIC SCALES
0 50 100 150 200
HORIZ SCALE: 1" = 50'
0 10 20 30 40
VERT SCALE: 1" = 10'

LIGO-D960863-A-O

REFERENCES		REVISIONS							
		A	6/14/96	WRB	WL				FINAL DESIGN REVIEW
DRAWING NO.	DESCRIPTION	NO.	DATE	BY	CHKD	ENGR	PROJ		DESCRIPTION

DRAWN	WRB	
CHECKED		
ENGINEER		
PROJ		

PARSONS
100 WEST WALNUT STREET
PASADENA, CALIFORNIA

LIGO
CALIFORNIA INSTITUTE OF TECHNOLOGY
MASSACHUSETTS INSTITUTE OF TECHNOLOGY

LASER INTERFEROMETER
GRAVITATIONAL-WAVE OBSERVATORY
SITE NO. 2 - LIVINGSTON, LOUISIANA

TITLE: CIVIL GRADING SECTIONS & DETAILS

SCALE	CONTRACT NUMBER	PROJECT NUMBER
AS NOTED	PP150969	8094

SHEET NUMBER: LA-C-053 REVISION: A

LIGOLAF3.BDR

This document and the design it covers are the property of PARSONS. They are loaned only with the borrower's expressed written agreement that they will not be reproduced, copied, loaned, exhibited, or used in any other way, except by written consent from PARSONS to the borrower.