GENERAL NOTES

DWG #	SHT #	REV #	DESCRIPTION	CBI STATUS	CALTECH STATUS
0	1 OF 2	7D	GENERAL NOTES AND DRAWING LIST	REV 7D REVISION	REV 7D SUBMITTED
0	2 OF 2	7D	BEAM TUBE WELD SEAM ORIENTATION	REV 7D REVISION	REV 7D SUBMITTED
1	1 OF 4	6	HANFORD BT MODULES HX1 AND HX2	REV 6 RELEASED	REV 6 APPROVED
1	2 OF 4	6	HANFORD BT MODULES HY1 AND HY2	REV 6 RELEASED	REV 6 APPROVED
1	3 OF 4	6	LIVINGSTON BT MODULES LX1 AND LX2	REV 6 RELEASED	REV 6 APPROVED
1	4 OF 4	6	LIVINGSTON BT MODULES LY1 AND LY2	REV 6 RELEASED	REV 6 APPROVED
2	1 OF 4	5D	SUB-ASSEMBLY END LOCATIONS- HX1 & HY1	REV 5D REVISION	REV 5D SUBMITTED
2	2 OF 4	5D	SUB-ASSEMBLY END LOCATIONS- HX2 & HY2	REV 5D REVISION	REV 5D SUBMITTED
2	3 OF 4	5D	SUB-ASSEMBLY END LOCATIONS- LX1 & LY1	REV 5D REVISION	REV 5D SUBMITTED
2	4 OF 4	5D	SUB-ASSEMBLY END LOCATIONS- LX2 & LY2	REV 5D REVISION	REV 5D SUBMITTED
3	1 OF 4	5D	SUPPORT LOCATIONS- HX1 & HY1	REV 5D REVISION	REV 5D SUBMITTED
3	2 OF 4	5D	SUPPORT LOCATIONS- HX2 & HY2	REV 5D REVISION	REV 5D SUBMITTED
3	3 OF 4	5D	SUPPORT LOCATIONS- LX1 & LY1	REV 5D REVISION	REV 5D SUBMITTED
3	4 OF 4	5D	SUPPORT LOCATIONS- LX2 & LY2	REV 5D REVISION	REV 5D SUBMITTED
4	1 OF 7	6D	SUB-ASSEMBLIES A AND B	REV 6D REVISION	REV 6D SUBMITTED
4	2 OF 7	6D	SUB-ASSEMBLIES C, D, E AND J	REV 6D REVISION	REV 6D SUBMITTED
4	3 OF 7	6D	SUB-ASSEMBLIES F AND G	REV 6D REVISION	REV 6D SUBMITTED
4	4 OF 7	6D	SUB-ASSEMBLIES H, I, K AND R	REV 6D REVISION	REV 6D SUBMITTED
4	5 OF 7	6D	SUB-ASSEMBLIES L AND M	REV 6D REVISION	REV 6D SUBMITTED
4	6 OF 7	6D	SUB-ASSEMBLIES N, O, P AND Q	REV 6D REVISION	REV 6D SUBMITTED
4	7 OF 7	6D	SUB-ASSEMBLY S	REV 6D REVISION	REV 6D SUBMITTED
5	-	-	VOID	---	---
6	-	7	ELEVATION-BEAM TUBE FIXED SUPPORT	REV 7 RELEASED	REV 7 APPROVED
7	1 OF 2	8	PLAN VIEW AND DETAILS (AWAY FROM TERMINATION) - BT FIXED SUPPORT	REV 8 RELEASED	REV 8 APPROVED
7	2 OF 2	8	PLAN VIEW AND DETAILS (NEAR TERMINATION) - BT FIXED SUPPORT	REV 8 RELEASED	REV 8 APPROVED
8	1 OF 2	9D	SUPPORT LUG ASSEMBLY AND SECTION DETAILS-BT FIXED SUPPORT	REV 9D REVISION	REV 9D SUBMITTED
8	2 OF 2	9D	SUPPORT LUG ASSEMBLY AND SECTION DETAILS-BT FIXED SUPPORT	REV 9D REVISION	REV 9D SUBMITTED
9	-	-	VOID	---	---
10	-	-	VOID	---	---
11	-	-	VOID	---	---
12	-	-	VOID	---	---
13	-	3	PUMP PORT DETAILS	REV 3 RELEASED	REV 3 APPROVED
14	-	-	VOID	---	---
15	-	5	VACUUM STIFFENER DETAILS	REV 5 RELEASED	REV 5 APPROVED
16	-	6	SUPPORT RINGS-FIXED, GUIDED AND TERMINATIONS	REV 6 RELEASED	REV 6 APPROVED
17	-	-	VOID	---	---
18	-	-	VOID	---	---
19	1 OF 3	7	BT GUIDED SUPPORT-ELEVATION	REV 7 RELEASED	REV 7 APPROVED
19	2 OF 3	7	BT GUIDED SUPPORT-SECTION A-A AND DETAILS	REV 7 RELEASED	REV 7 APPROVED
19	3 OF 3	7	BT GUIDED SUPPORT-DETAILS	REV 7 RELEASED	REV 7 APPROVED
20	1 OF 4	3	BT TERMINATION SUPPORT-ELEVATION	REV 3 RELEASED	REV 3 APPROVED
20	2 OF 4	3	BT TERMINATION SUPPORT-PLAN VIEW	REV 3 RELEASED	REV 3 APPROVED
20	3 OF 4	3	BT TERMINATION SUPPORT-PIECE DETAILS	REV 3 RELEASED	REV 3 APPROVED
20	4 OF 4	3	BT TERMINATION SUPPORT-PIECE DETAILS	REV 3 RELEASED	REV 3 APPROVED
21	-	2	TERMINATION SUPPORT RING DETAILS	REV 2 RELEASED	REV 2 APPROVED

DWG #	SHT #	REV #	DESCRIPTION	CBI STATUS	CALTECH STATUS
22	1 OF 1	2	GATE VALVE SOFT SUPPORT	REV 2 RELEASED	REV 2 APPROVED
101	1 OF 7	3D	TYPE "B" - PLAN VIEW "A"	REV 3D REVISION	REV 3D SUBMITTED
101	2 OF 7	3D	TYPE "B" - SECTION "A"	REV 3D REVISION	REV 3D SUBMITTED
101	3 OF 7	3D	TYPE "B" - SECTION "B"	REV 3D REVISION	REV 3D SUBMITTED
101	4 OF 7	3D	TYPE "B" - PLAN "A", DETAIL 1	REV 3D REVISION	REV 3D SUBMITTED
101	5 OF 7	3D	TYPE "B" SUPPORTS - PLAN "A"	REV 3D REVISION	REV 3D SUBMITTED
101	6 OF 7	3D	TYPE "B" SUPPORTS - SECTION "A"	REV 3D REVISION	REV 3D SUBMITTED
101	7 OF 7	-	VOID	---	---
102	1 OF 3	1D	TYPE "H" - PLAN VIEW "A"	REV 1D REVISION	REV 1D SUBMITTED
102	2 OF 3	1D	TYPE "H" - SECTION "A"	REV 1D REVISION	REV 1D SUBMITTED
102	3 OF 3	1D	TYPE "H" - SECTION "B"	REV 1D REVISION	REV 1D SUBMITTED
103	1 OF 9	2	CALIBRATION MODULE - PLAN "E"	REV 2 RELEASED	REV 2 APPROVED
103	2 OF 9	2	CALIBRATION MODULE - PLAN "F"	REV 2 RELEASED	REV 2 APPROVED
103	3 OF 9	2	CALIBRATION MODULE - SECTION "A"	REV 2 RELEASED	REV 2 APPROVED
103	4 OF 9	2	CALIBRATION MODULE - SECTION "B"	REV 2 RELEASED	REV 2 APPROVED
103	5 OF 9	2	CALIBRATION MODULE - SECTION "C"	REV 2 RELEASED	REV 2 APPROVED
103	6 OF 9	2	CALIBRATION MODULE - SECTION "D"	REV 2 RELEASED	REV 2 APPROVED
103	7 OF 9	2	CALIBRATION MODULE - STRUCTURAL PLAN	REV 2 RELEASED	REV 2 APPROVED
103	8 OF 9	2	CALIBRATION MOD. - STRUC. - SECT. "A"	REV 2 RELEASED	REV 2 APPROVED
103	9 OF 9	2	CALIBRATION MOD. - STRUC. - SECT. "B"	REV 2 RELEASED	REV 2 APPROVED
104	1 OF 1	1D	PUMP PORT ISOLATION VALVE	REV 1D REVISION	REV 1D SUBMITTED

NOTES:

1) BEFORE WELDING ANY GALVANIZED PIECES, THE GALVANIZING MUST BE REMOVED FROM THE WELD JOINT BY GRINDING, BURNING, ETC.

TOLERANCE TABLE

APPLIES TO ALL FABRICATED PIECES OR ASSEMBLIES (UNLESS NOTED OTHERWISE). MATERIAL THICKNESS TOLERANCES ARE PER ASTM.

	LINEAR DIMENSIONS			ANGULAR DIMENSIONS
	$\leq 3\frac{1}{2}''$	$3\frac{1}{2}'' < D \leq 24''$	$> 24''$	0° TO 360°
TOLERANCE	$\pm \frac{1}{32}$	$\pm \frac{1}{16}$	$\pm \frac{1}{8}$	± 0.5°

NONDESTRUCTIVE EXAMINATION (NDE) SYMBOLS

VI = VISUAL INSPECTION

MST = HELIUM MASS SPECTROMETER TEST

APPROVED

M. Tellalian 12-6-96
CBI DATE

Sam E Jones 12/13/96
CALTECH DATE

BY	CHKD	DATE	REVISIONS	REMARKS
DTR	WAC	6-30-96	6	REV. DWG. 0, 101. ADDED DWG. DWG. 104.
DTR	ML	9-13-96	5	REV. DWG. 0, 13 AND 22.
DTR	MLT	12-6-96	7	REV. NUMEROUS DWG. AND ADDED NOTE 1.

CBI

SUPPLIER'S / PURCHASER'S NO

LIGO BEAM TUBE
HANFORD, WA AND LIVINGSTON, LA

GENERAL NOTES

CUSTOMER'S NO
BY DTR CHKD CST DATE 5-9-96
M.L. TELLALIAN
ENGINEERING ASSIGNED

CONTRACT NO 953571
DWG 0 REV 7
SHT 1

LIGO-D960510-07-B

INDICATES CHANGE FROM PREVIOUS ISSUE

557100GEN.DGN

BEAM TUBE ASSEMBLY	TUBE LENGTH (W/O EXP. JT.) (FT.)	TUBE LENGTH (W/O EXP. JT.) (IN.)	# OF WRAPS 24" COIL	# OF WRAPS 36" COIL	SEAM ORIENTATION (DEGREES) 24" COIL START	24" COIL END	36" COIL START	36" COIL END	PUMP PORT	EXPANSION JOINT AT START	EXPANSION JOINT SEAM ORIENTATION (DEG.)
A	62.9167	755.000	31.07	20.39	90	115	90	230		Y	250
B	65.0000	780.000	32.10	21.07	0	36	0	25			
C	65.0000	780.000	32.10	21.07	135	171	90	115	Y		
D	65.0000	780.000	32.10	21.07	315	351	270	295	Y		
E	49.6328	595.594	24.51	16.09	135	319	135	167	Y	Y	270
F	47.0078	564.094	23.22	15.23	0	79	0	83			
G	44.9271	539.125	22.19	14.56	180	248	180	22		Y	135
H	49.6328	595.594	24.51	16.09	45	229	180	212	Y		
I	49.6328	595.594	24.51	16.09	225	49	0	32	Y		
J	49.6328	595.594	24.51	16.09	315	139	315	347	Y	Y	270
K	56.9583	683.500	28.13	18.46	270	317	0	166	Y	Y	90
L	54.3333	652.000	26.83	17.61	0	299	0	220			
M	52.2552	627.062	25.81	16.94	180	112	0	338		Y	225
N	56.9583	683.500	28.13	18.46	45	92	180	346	Y		
O	56.9583	683.500	28.13	18.46	225	272	0	166	Y	Y	90
P	56.9583	683.500	28.13	18.46	225	272	0	166	Y		
Q	56.9583	683.500	28.13	18.46	45	92	180	346	Y	Y	90
R	56.9583	683.500	28.13	18.46	90	137	180	346	Y	Y	0
S	65.0000	780.000	32.10	21.07	0	36	180	205			

NOTE: ORIENT SEAMS WITHIN ±15° OF STATED VALUES.

D = 48.998 IN. (DIAMETER TO PLATE CENTERLINE)
C = 153.932 IN. (CIRCUMFERENCE AT PLATE CENTERLINE)
L_ 24 = 24.297 IN. (PITCH AT D WITH 24" WIDE COIL)
L_ 36 = 37.027 IN. (PITCH AT D WITH 36" WIDE COIL)

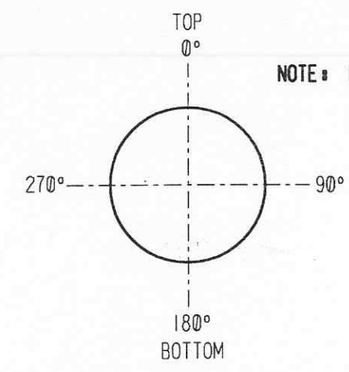

NOTE: DIRECTION OF CONSTRUCTION IS INTO THE PAGE

APPROVED

M. Tellalian 12-6-96
CBI DATE

Larry K. Jones 12/13/96
CALTECH DATE

▶ INDICATES CHANGE FROM PREVIOUS ISSUE

REVISIONS	BY	CHKD	DATE	REMARKS
6	DTR	MAC	9-30-96	REV. SHT. 1
5	DTR	MLT	9-13-96	REV. SHT. 1
7	DTR	MLT	12-6-96	REV. SHT. 1

CBI

SUPPLIER'S / PURCHASER'S NO

LIGO BEAM TUBE
HANFORD, WA AND LIVINGSTON, LA

BEAM TUBE WELD SEAM ORIENTATION

CUSTOMER'S NO
BY DTR CHKD CST DATE 5-9-96
M.L. TELLALIAN
ENGINEERING ASSIGNED

CONTRACT NO 953571
DWG 0 REV 7
SHT 2

557IGENI.DGN