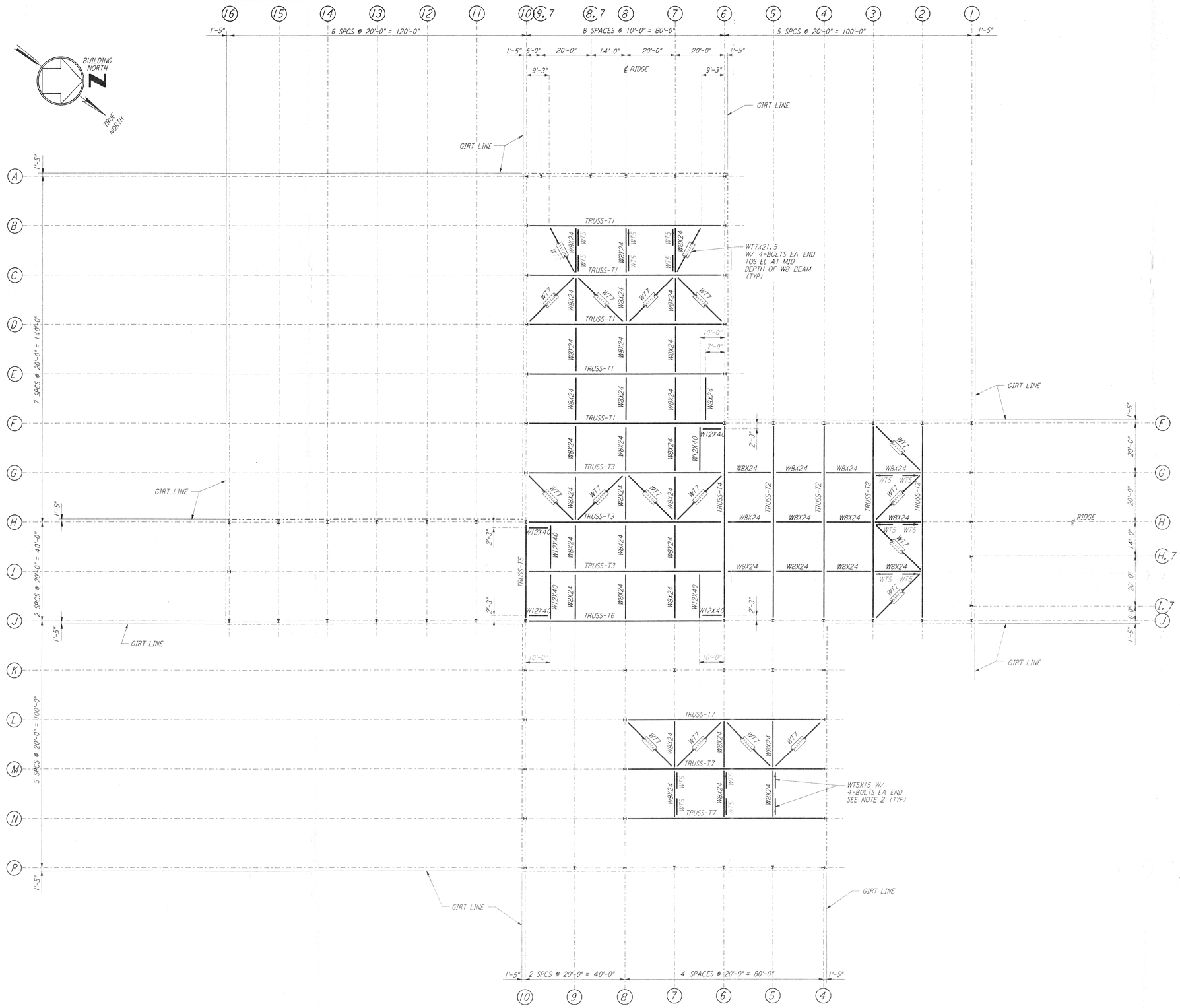

NOTES:

1. FOR NOTES SEE DRAWING WA-S-504.
2. ——— DENOTES WT5 VERTICAL BRACE AND POINTS TO LOW END. FOR CONNECTION SEE DETAIL 5 SIM / WA-S-006

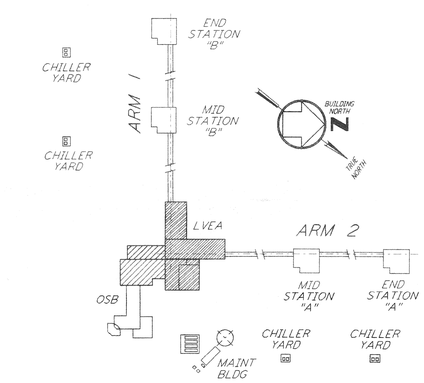

KEY PLAN

0 8 16 24 32 40 48 56 64FT
1/16" = 1'-0"

REFERENCES		REVISIONS						
DRAWING NO.	DESCRIPTION	NO.	DATE	BY	CHKD	ENGR	PROJ	DESCRIPTION

ISSUED FOR CONSTRUCTION		
DRAWN	MCS	6-24-96
CHECKED	[illegible]	7-2-96
ENGINEER	[illegible]	6-28-96
PROJ	[illegible]	7/9/96

EXPIRES 10-29-96

PARSONS
100 WEST WALNUT STREET
PASADENA, CALIFORNIA

LIGO
CALIFORNIA INSTITUTE OF TECHNOLOGY
MASSACHUSETTS INSTITUTE OF TECHNOLOGY

LASER INTERFEROMETER
GRAVITATIONAL-WAVE OBSERVATORY
SITE NO. 1 - HANFORD, WASHINGTON

TITLE: STRUCTURAL CORNER STATION LVEA - TRUSS BOTTOM CHORD FRMG PLAN

SCALE	CONTRACT NUMBER	PROJECT NUMBER
AS NOTED	PP150969	8094

SHEET NUMBER: WA-S-505 REVISIONS: 0

LIGO-D960326-00-O

This document and the design it covers are the property of PARSONS. They are loaned only with the borrower's expressed written agreement that they will not be reproduced, copied, loaned, exhibited, or used in any other way, except by written consent from PARSONS to the borrower.

LIGOWAF.BOR