REV	DESCRIPTION OF CHANGE	APPROVAL	DATE

NOTES, UNLESS OTHERWISE SPECIFIED:
1. DIMENSIONS IN INCHES
2. MATERIAL: KAPTON, .0075 THICK
3. FOR ø3.00" X 1.00" THICK OPTIC.

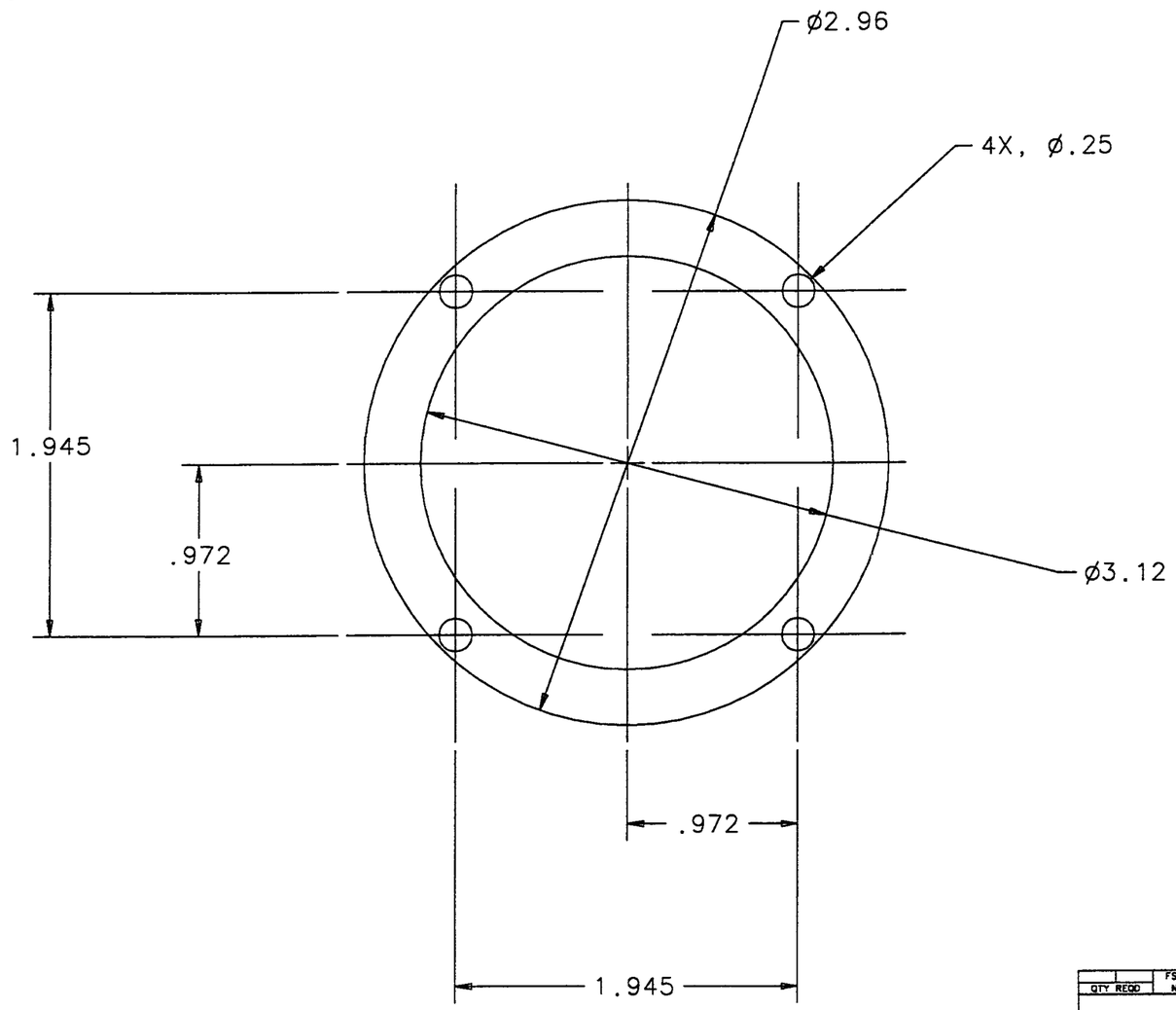

QTY REQD	FSCM NO	PART OR IDENTIFYING NO	NOMENCLATURE OR DESCRIPTION	MATERIAL SPECIFICATION	ITEM NO

PARTS LIST

UNLESS OTHERWISE SPECIFIED DIMENSIONS ARE IN in [mm]
TOLERANCES ARE:
FRACTIONS DECIMALS
.XX=.03
.XXX=.010
DO NOT SCALE DRAWING

APPROVALS			DATE
DRAWN J. Hazel	GROUP		1/96
CHECKED			

MATERIAL KAPTON
FINISH NONE
SCALE NONE
FILENAME ~janeen/D960021.asc

LIGO CALIFORNIA INSTITUTE OF TECHNOLOGY MASSACHUSETTS INSTITUTE OF TECHNOLOGY

TITLE KAPTON TEMPLATE

SIZE B DWG NO. D960021 REV 00

SHEET 1 OF 1