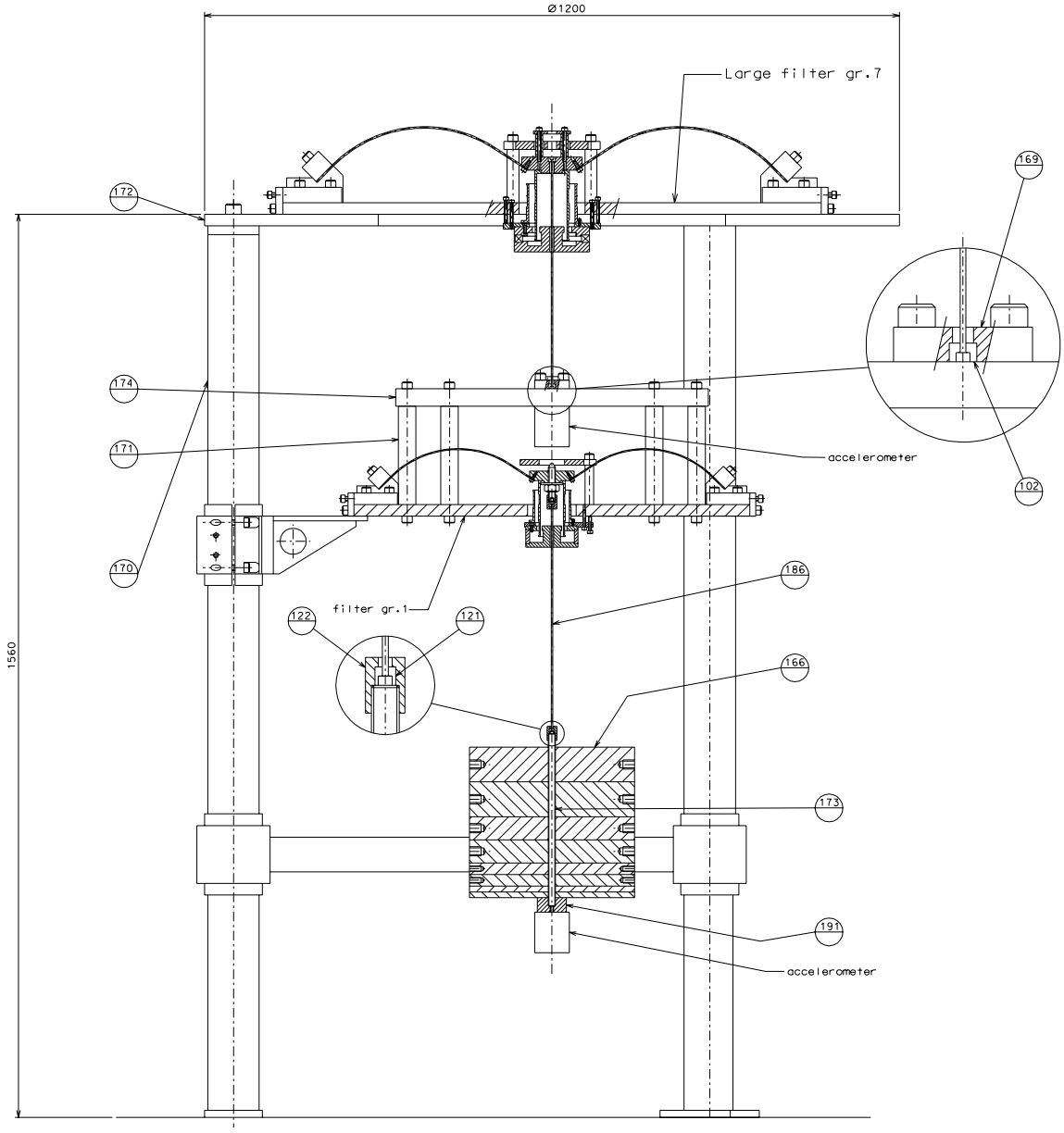

ref.	note	date	signature

modifications

ref.	draw.	added legend	ref.	draw.	added legend
170	178	structure	191	185	connection plate
169	177	clamp 1/2 cup	186	177	wire
166	175	ballast	174	179	filter flat
122	165	nut	173	177	threaded bar
121	165	small 1/2 cup	172	179	top flat
102	153	1/2 cup	171	177	column

171-174	tommy head M12x45	16
170-172	tommy head M16x40	3
detail	type	n°piec.

Screw's table

LIGO PROJECT

designed for: R.De Salvo
drawn by: G.Gennaro-PROMEC
date: 22-11-05

title: HAM-OPTICAL BENCH
FILTER'S TEST

LIGO-D051176-00-D

scale: 1/4 A 1