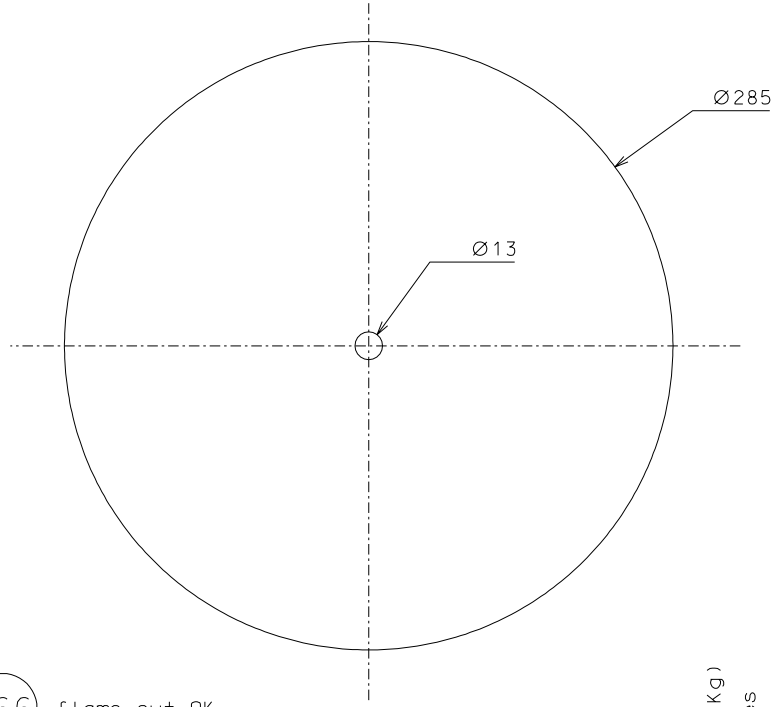

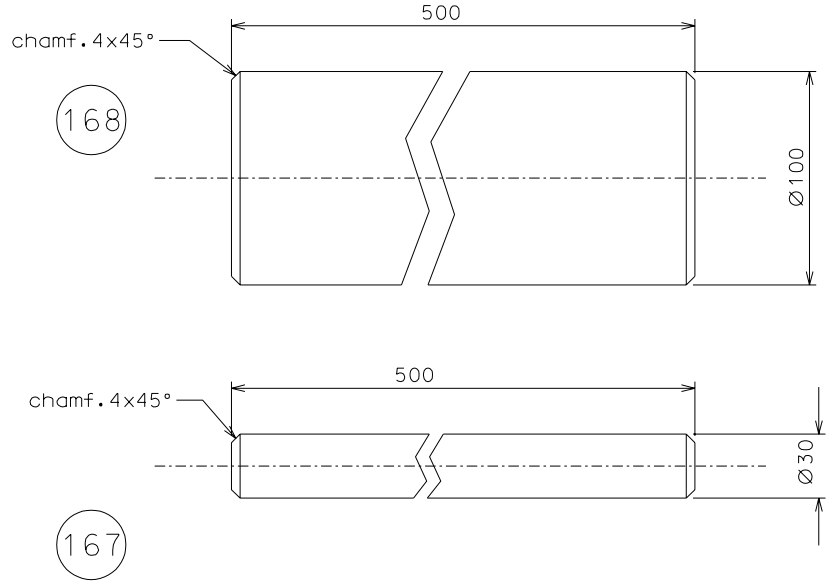

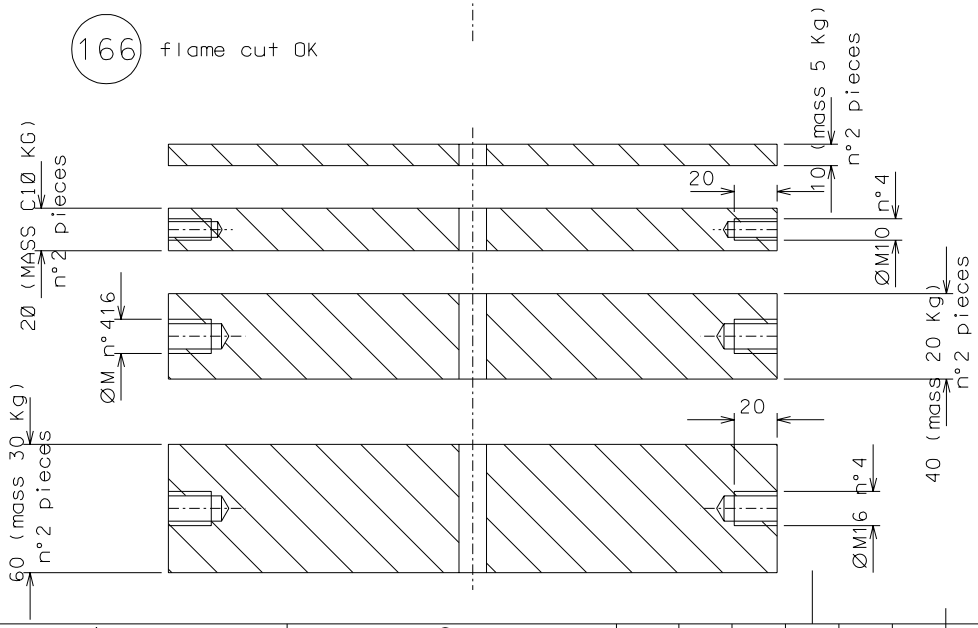

ref.	note	date	signature
	modified ref. assembly	26-02-06	

modifications

ref.	pieces	mat. and treatments	scale	ref.	pieces	mat. and treatments	scale
167	16	inox	1/2.5				
166	8	Fe 340	1/2.5	168	17	inox	1/2.5

General machining tolerances UNI 5307-63

Dimensions	< 6	> 6-30	> 30-120	> 120-315	> 315-1000	> 1000-2000	> 2000-4000	> 4000
linear Toll.	± 0.1	± 0.2	± 0.3	± 0.5	± 0.8	± 1.2	± 2	± 3
angular Toll.	± 1	± 30'	± 20'	± 10'		refered to the shortest side		

LIGO PROJECT

designed for R.De Salvo

draw. by G.Gennaro-PROMEC

date 26-10-05

scale 1/2.5

title

HAM-OPTICAL BENCH

BALLAST

LIGO-D051175-01-D

detail from 103-176

A 3