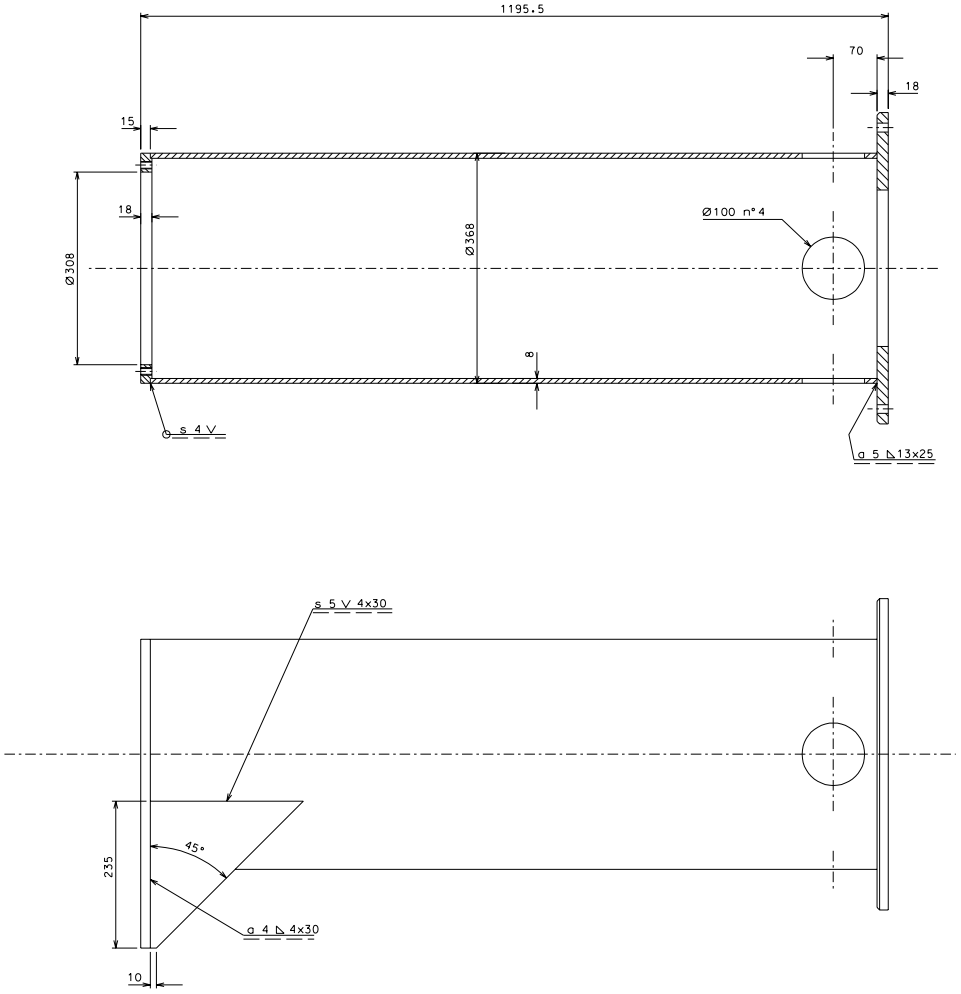


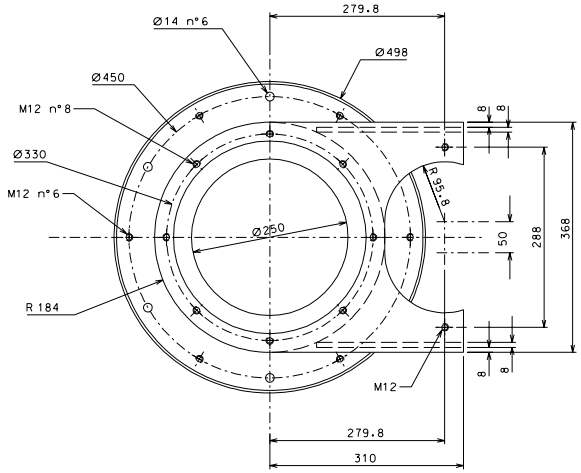


98 painted

| ref. | note | date | signature |
|---|---|---|---|
| | | | |

modifications

| ref. | pieces | mat. and treatments | scale | ref. | pieces | mat. and treatments | scale |
|---|---|---|---|---|---|---|---|
| 98 | 4 | Fe 360 | 1/4 | | | | |

General machining tolerances UNI 5301-63

| Dimensions | < 6 | > 6-30 | > 30-120 | > 120-315 | > 315-1000 | > 1000-2000 | > 2000-4000 | > 4000 |
|---|---|---|---|---|---|---|---|---|
| linear toll. | ± 0.1 | ± 0.2 | ± 0.3 | ± 0.5 | ± 0.8 | ± 1.2 | ± 2 | ± 3 |
| angular toll. | ± 1 | ± 30' | ± 20' | ± 10' | | | | |

angular toll. ± 10' referred to the shortest side

LIGO PROJECT

designed for: R.De Salvo
drawn by: G.Gennaro-PROMEC
date: 2-08-05
scale: 1/4

title: HAM-OPTICAL BENCH
HORIZONTAL CALIBRATOR

LIGO-D051155-00-D

general draw. 149 A 1