REV.	DATE	DCN #	DRAWING TREE #

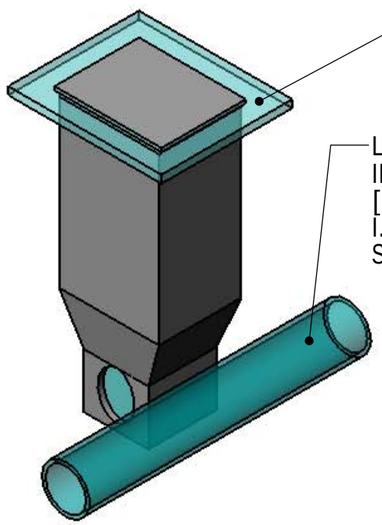

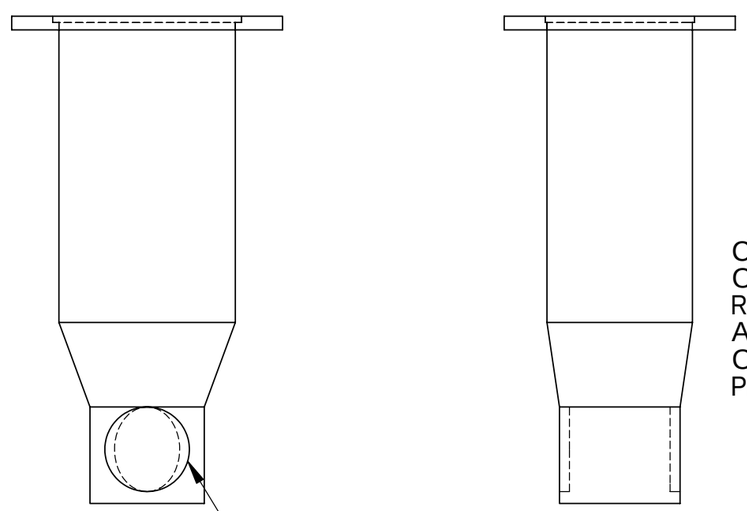

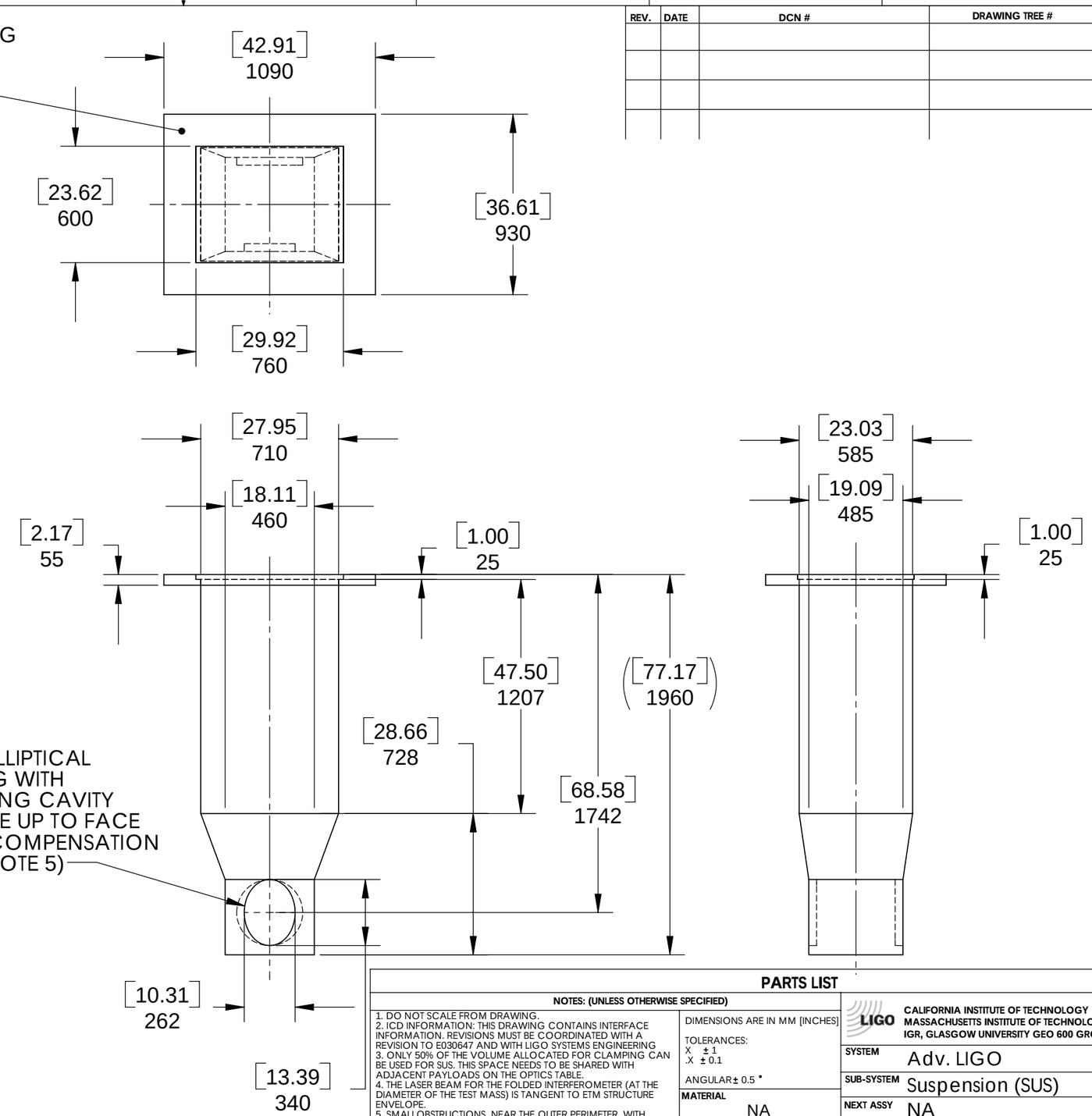

PARTS LIST

NOTES: (UNLESS OTHERWISE SPECIFIED)

1. DO NOT SCALE FROM DRAWING.
2. ICD INFORMATION: THIS DRAWING CONTAINS INTERFACE INFORMATION. REVISIONS MUST BE COORDINATED WITH A REVISION TO E030647 AND WITH LIGO SYSTEMS ENGINEERING
3. ONLY 50% OF THE VOLUME ALLOCATED FOR CLAMPING CAN BE USED FOR SUS. THIS SPACE NEEDS TO BE SHARED WITH ADJACENT PAYLOADS ON THE OPTICS TABLE.
4. THE LASER BEAM FOR THE FOLDED INTERFEROMETER (AT THE DIAMETER OF THE TEST MASS) IS TANGENT TO ETM STRUCTURE ENVELOPE.
5. SMALLOBSTRUCTIONS, NEAR THE OUTER PERIMETER, WITH PROPER SURFACE TREATMENT (SEE THE ICD) ARE PERMITTED IN THE CLEAR OPTICAL APERTURES.
6. THIS ENVELOPE DOES NOT INCLUDE THE RECYCLING CAVITY BAFFLE.
7. THE OSEM CABLING MUST STAY WITHIN THE ENVELOPE EXCEPT AT THE POINT OF EXIT, NEAR THE INTERFACE WITH THE OPTICS TABLE.
8. MINIMIZE VOLUME FOR SYSTEM FLEXIBILITY IF POSSIBLE.

DIMENSIONS ARE IN MM [INCHES]

TOLERANCES:
X ± 1
.X ± 0.1

ANGULAR ± 0.5 °

MATERIAL: NA

FINISH: µ inch

	NAME	DATE
DRAWN	D. Coyne	
CHECKED		
APPROVED		

CALIFORNIA INSTITUTE OF TECHNOLOGY
MASSACHUSETTS INSTITUTE OF TECHNOLOGY
IGR, GLASGOW UNIVERSITY GEO 600 GROUP

SYSTEM: Adv. LIGO

SUB-SYSTEM: Suspension (SUS)

NEXT ASSY: NA

PART NAME: ETM & ITM SUS Structure Envelope

SIZE: B | DWG. NO.: D050266 | REV.: 00

SCALE: 1:24 | PROJECTION: | SHEET 1 OF 1