REV.	DATE	DCN #	DRAWING TREE #
A		E060057	

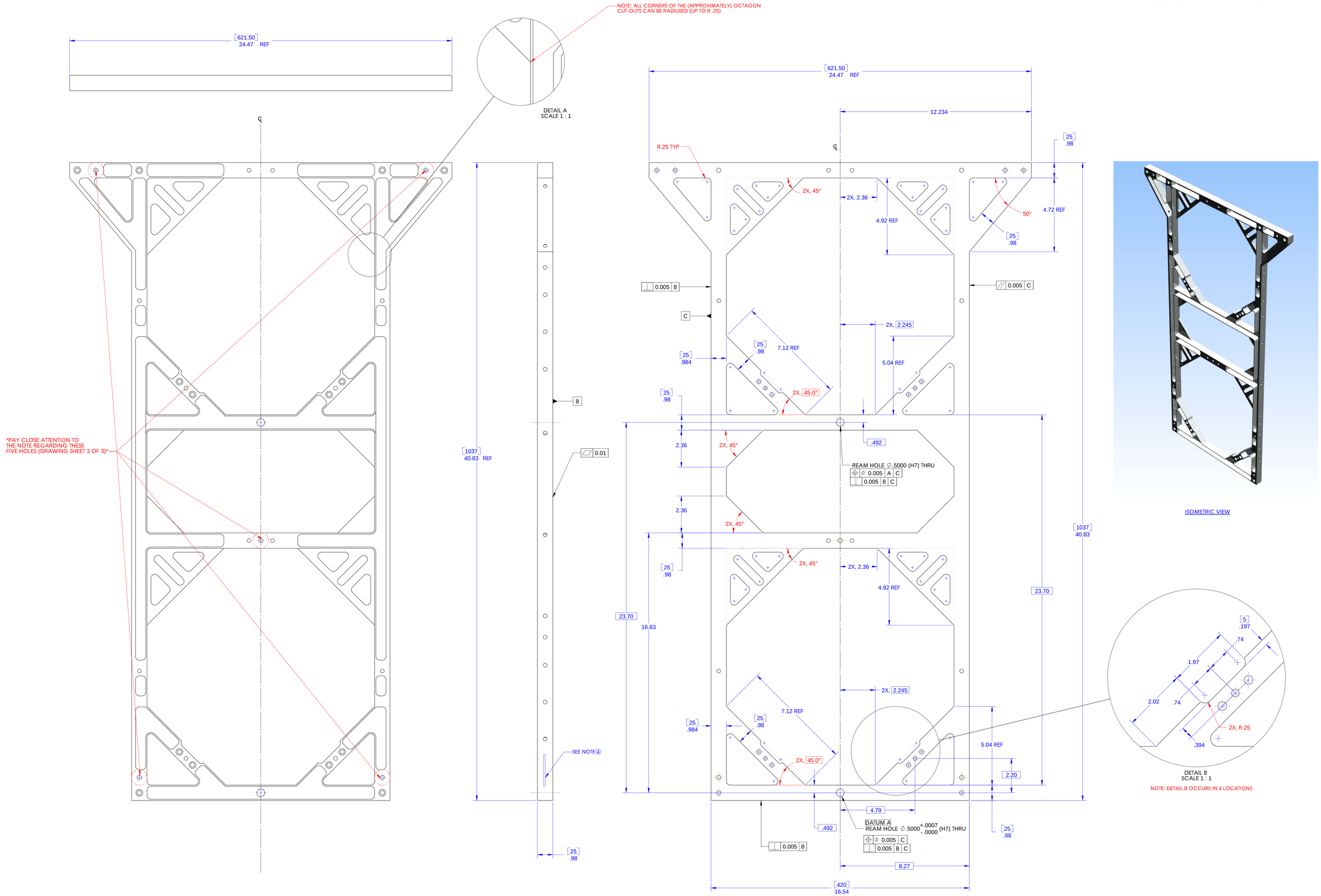

PARTS LIST

GENERAL NOTES: (UNLESS OTHERWISE SPECIFIED)

1. DO NOT SCALE FROM DRAWING.
2. REMOVE ALL SHARP EDGES, R.02 MIN.
3. ALL MACHINING FLUIDS SHALL BE WATER SOLUBLE AND FREE OF SULFUR, CHLORINE AND SILICONE.
4. SCRIBE, ENGRAVE OR MECHANICALLY STAMP DRAWING (NO INKS OR DYES) PART NUMBER, REVISION ON NOTED SURFACE OF PART FOLLOWED ON THE NEXT LINE WITH A THREE DIGIT SERIAL NUMBER. SERIAL NUMBERS START AT 001 FOR THE FIRST ARTICLE AND PROCEED CONSECUTIVELY. USE .12" HIGH CHARACTERS, UNLESS THE SIZE OF THE PART DICTATES SMALL CHARACTERS. A VIBRATORY TOOL MAY BE USED. EXAMPLE: D050090-A1 S/N 001
5. THE COMPONENT IS SYMMETRIC ABOUT THE ℄
6. DUAL DIMENSIONS (MILLIMETERS) APPEAR IN SQUARE BRACKETS[ ], PRIMARILY FOR ADVANCED LIGO TECHNICAL REFERENCE
7. BACKGROUND INFORMATION: INITIAL DISCUSSIONS WITH MACHINISTS AT CALTECH INICATED THAT WATER JET CUTTING WOULD BE USED TO ACHIEVE THE BASIC SHAPES, THEN ANY FINISHING WOULD BE DONE BY MILLING WITH A R.25" CUTTER.

DIMENSIONS ARE IN INCHES
TOLERANCES:
.X ± 0.05
.XX ± 0.01
.XXX ± 0.005
ANGULAR: ± 0.1 °

MATERIAL: 6061-T6 Al
FINISH: 32 µ inch

	NAME	DATE
DRAWN	RJJ	04-05
CHECKED	MPL	APR 05
APPROVED		

LIGO CALIFORNIA INSTITUTE OF TECHNOLOGY
MASSACHUSETTS INSTITUTE OF TECHNOLOGY
ISR, GLASGOW UNIVERSITY GEO 600 GROUP

SYSTEM: ADVANCED LIGO
SUB-SYSTEM: SUS
NEXT ASSY: ASSEMBLY RIG_SINGLE CATCHER
PART NAME: INNER FACEPLATE
SIZE: E DWG. NO.: D050090 REV.: A
SCALE: 1:2 PROJECTION: SHEET 1 OF 3

REV.	DATE	DCN #	DRAWING TREE #

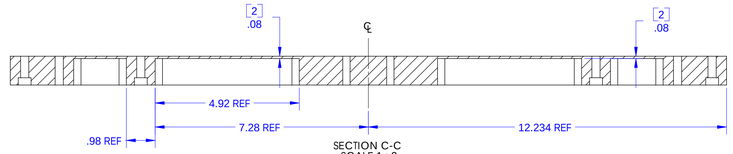

SECTION C-C
SCALE 1 : 2

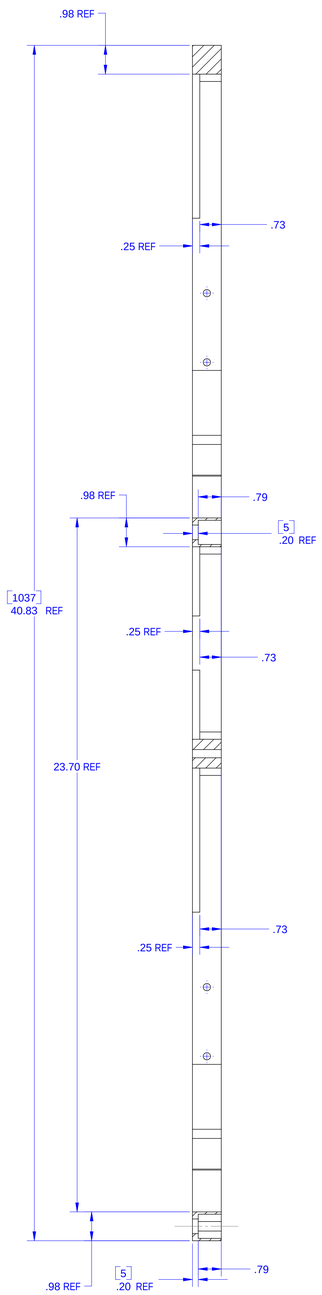

SECTION E-E
SCALE 1 : 2

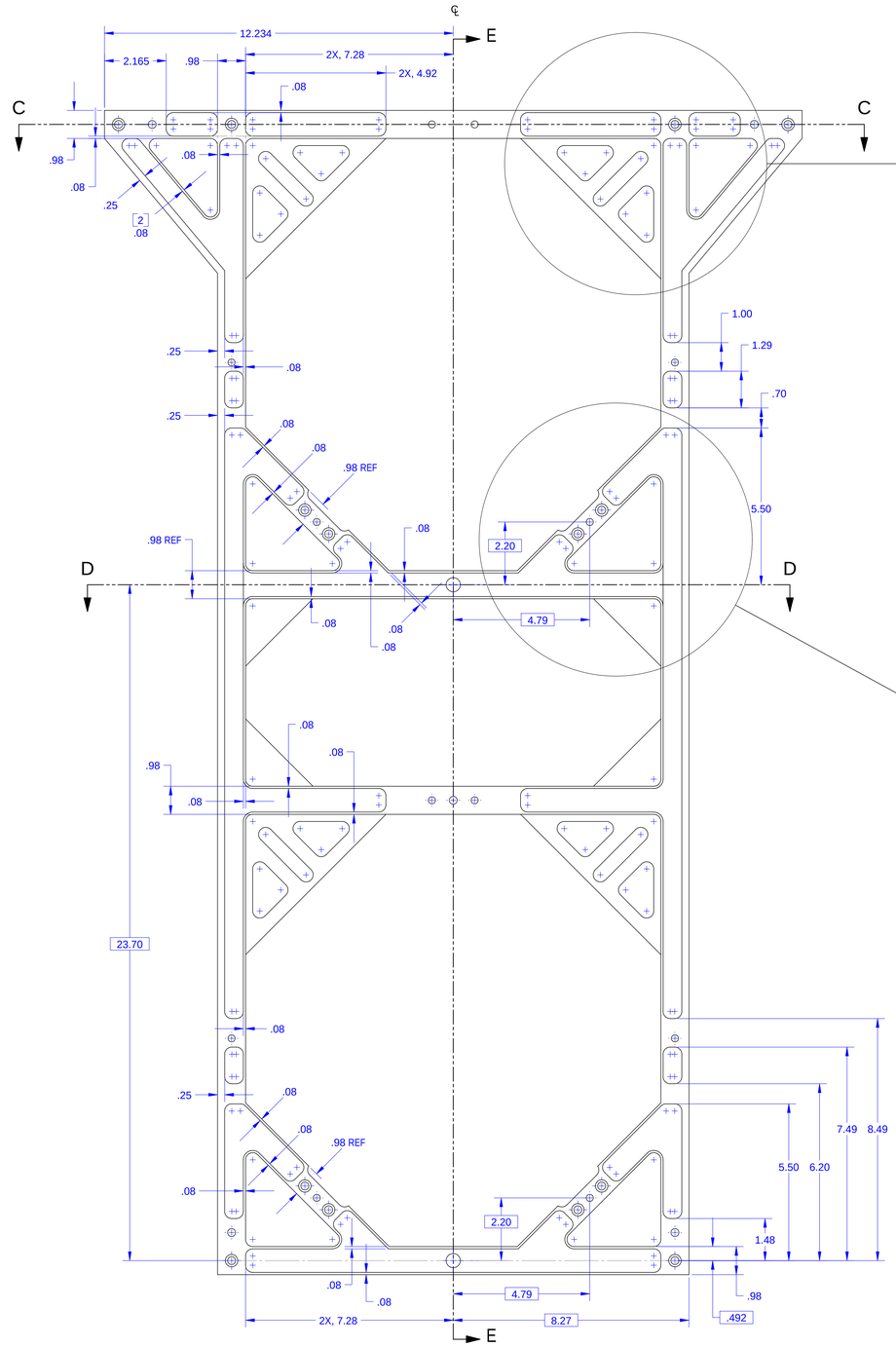

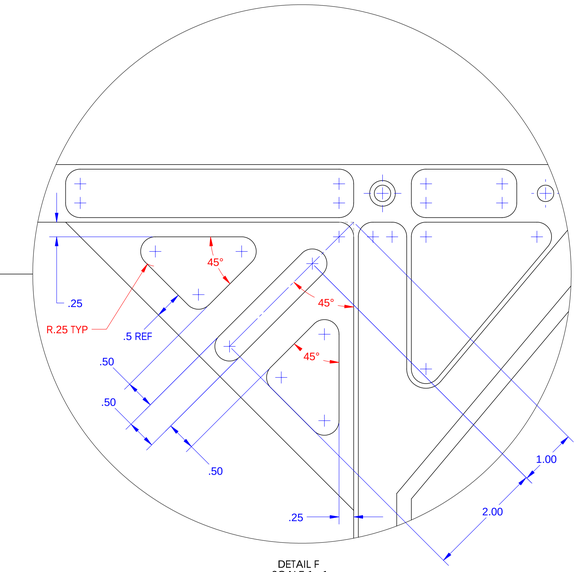

DETAIL F
SCALE 1 : 1

NOTE: 'DETAIL F' OCCURS IN 4 LOCATIONS

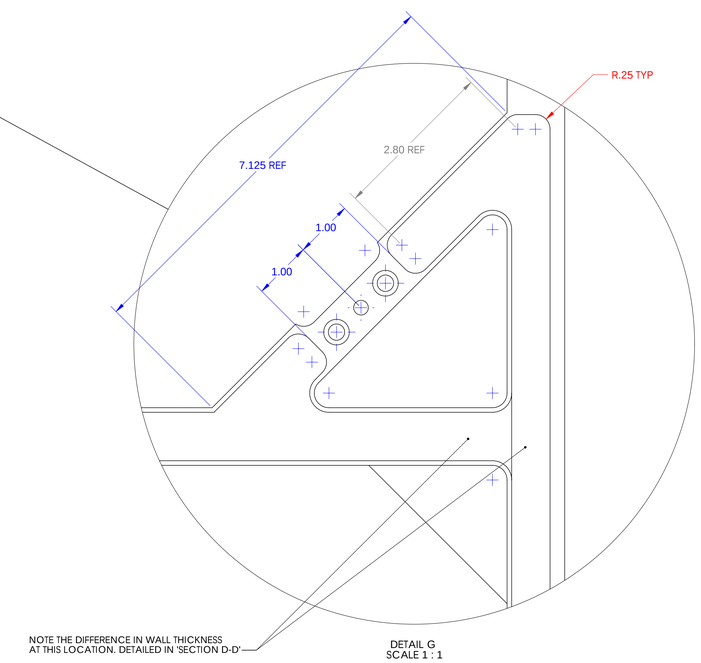

DETAIL G
SCALE 1 : 1

NOTE: 'DETAIL G' OCCURS IN 4 LOCATIONS

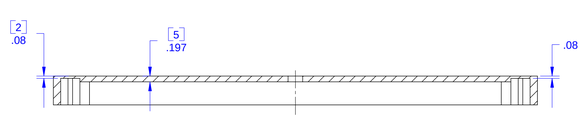

SECTION D-D
SCALE 1 : 2

PARTS LIST

GENERAL NOTES: (UNLESS OTHERWISE SPECIFIED)

1. DO NOT SCALE FROM DRAWING.
2. REMOVE ALL SHARP EDGES, R.02 MIN.
3. ALL MACHINING FLUIDS SHALL BE WATER SOLUBLE AND FREE OF SULFUR, CHLORINE AND SILICONE.

   SCRIBE, ENGRAVE OR MECHANICALLY STAMP DRAWING (NO INKS OR DYES) PART NUMBER, REVISION. ON NOTED SURFACE OF PART FOLLOWED ON THE NEXT LINE WITH A THREE DIGIT SERIAL NUMBER. SERIAL NUMBERS START AT 001 FOR THE FIRST ARTICLE AND PROCEED CONSECUTIVELY. USE .12" HIGH CHARACTERS, UNLESS THE SIZE OF THE PART DICTATES SMALL CHARACTERS. A VIBRATORY TOOL MAY BE USED. EXAMPLE: D050090-A1
   S/N 001
5. THE COMPONENT IS SYMMETRIC ABOUT THE ℄
6. DUAL DIMENSIONS (MILLIMETERS) APPEAR IN SQUARE BRACKETS[ ], PRIMARILY FOR ADVANCED LIGO TECHNICAL REFERENCE
7. BACKGROUND INFORMATION:
   INITIAL DISCUSSIONS WITH MACHINISTS AT CALTECH INDICATED THAT WATER JET CUTTING WOULD BE USED TO ACHIEVE THE BASIC SHAPES. THEN ANY FINISHING WOULD BE DONE BY MILLING WITH A R.25" CUTTER.

DIMENSIONS ARE IN INCHES
TOLERANCES:
X ± 0.05
X.X ± 0.02
X.XX ± 0.01
ANGULAR ± 0.1 °

MATERIAL: 6061-T6 Al
FINISH: 32 μ inch

	NAME	DATE
DRAWN	RAJ	04/05
CHECKED	WPL	APR 05
APPROVED		

LIGO
CALIFORNIA INSTITUTE OF TECHNOLOGY
MASSACHUSETS INSTITUTE OF TECHNOLOGY
IGR, GLASGOW UNIVERSITY GEO 600 GROUP

SYSTEM: ADVANCED LIGO
SUB-SYSTEM: SUS
NEXT ASSY: ASSEMBLY RIG_SINGLE CATCHER
PART NAME: INNER FACEPLATE
SIZE: E
DWG. NO.: D050090
REV.: A
SCALE: 1:2
PROJECTION:
SHEET 2 OF 3

REV.	DATE	DCN #	DRAWING TREE #

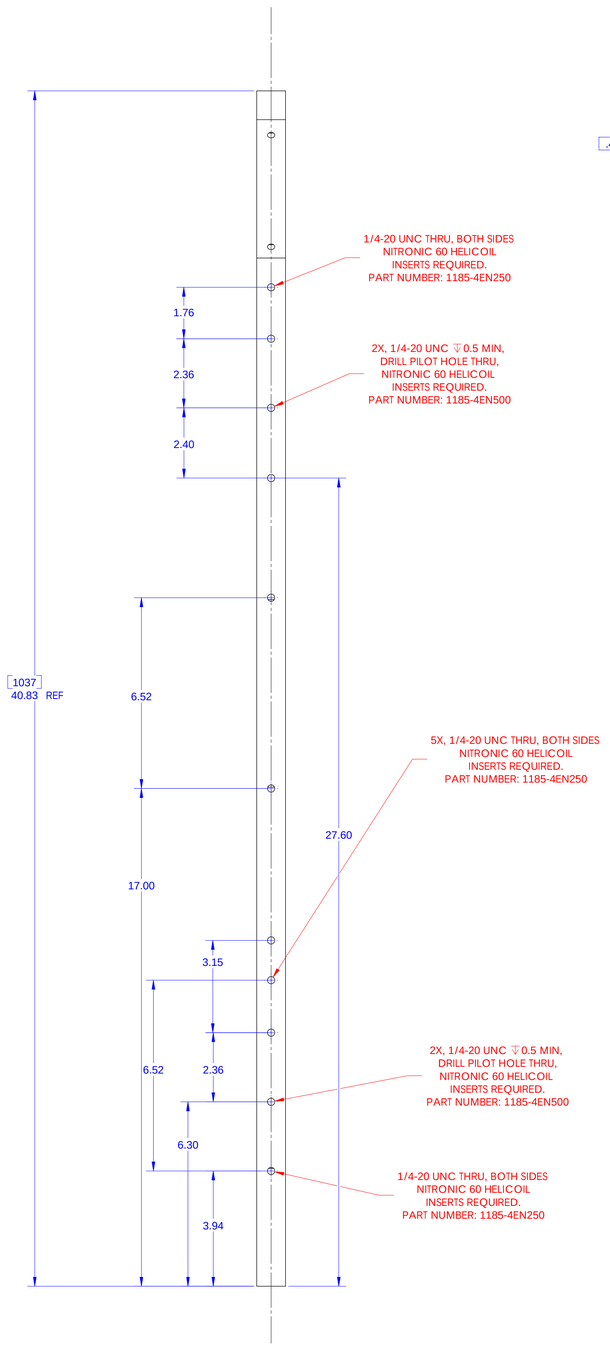

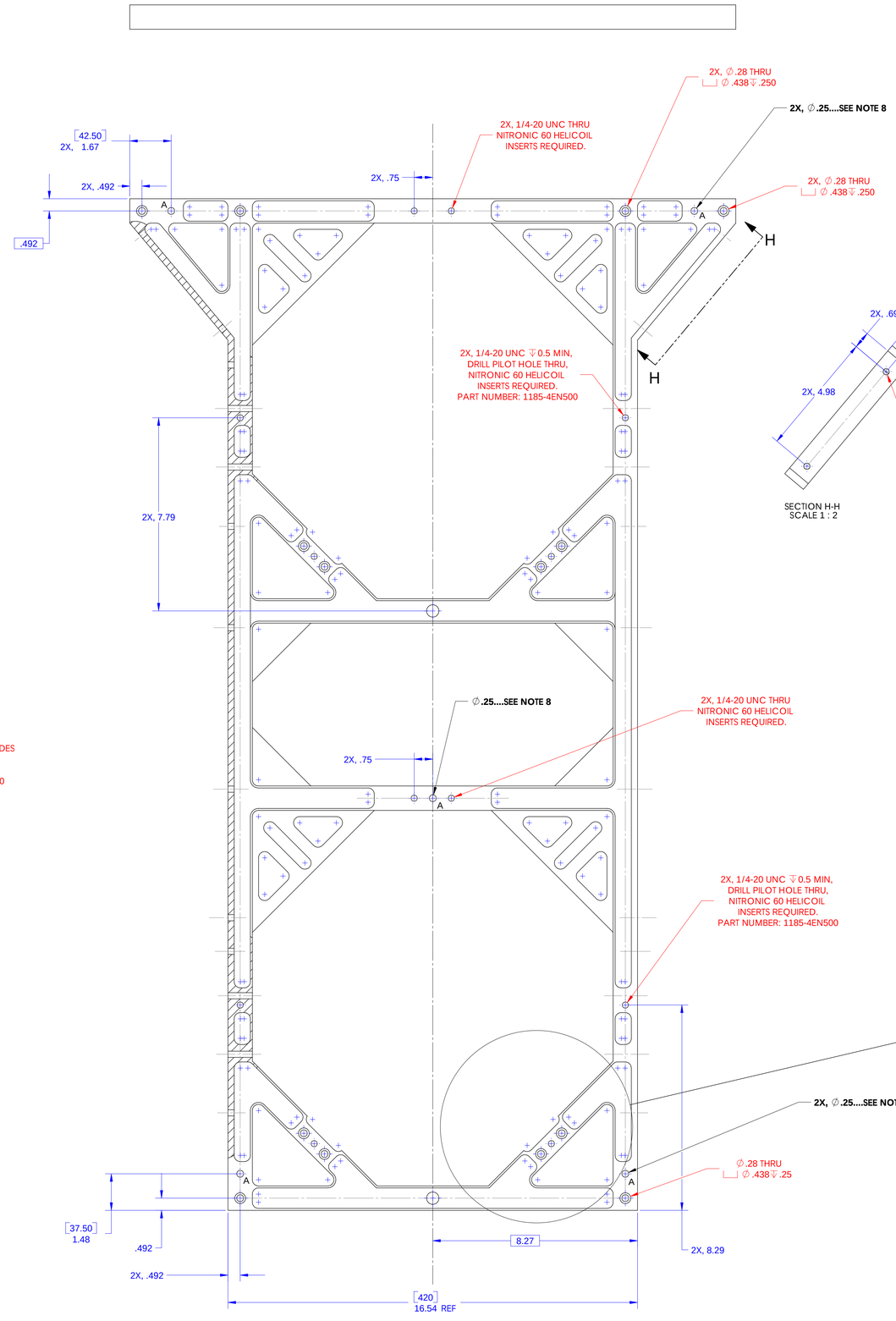

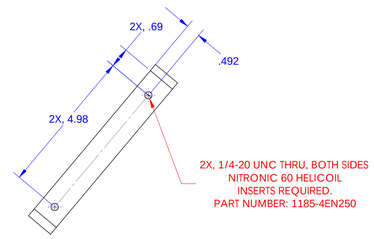

SECTION H-H
SCALE 1 : 2

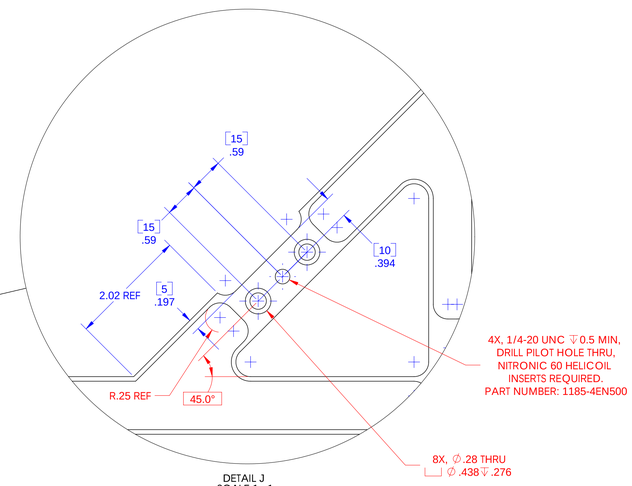

DETAIL J
SCALE 1 : 1

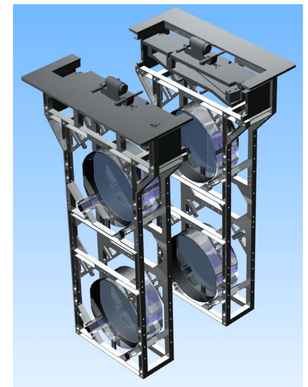

NOTE 8:

5 HOLES MARKED "A" AT FUTURE CONNECTION LOCATIONS:

AT THE FIVE LOCATIONS DETAILED, WE WILL IN FUTURE WISH TO
CONNECT TWO 'D050090' INNER FACEPLATES TOGETHER, USING
5 X, 1/4-20 SOCKETHEAD CAP SCEWS
THE TWO FACEPLATES SHALL BE CONNECTED AT A SPACING OF 5 MILLIMETERS
APART.
[*LIGO REF: THIS WILL FORM THE BASIS OF THE ASSEMBLY 'D040516'...SEE ABOVE PICTURE*]

THEREFORE, WE WILL AT THAT POINT ADAPT THE TWO INNER FACEPLATES SUCH THAT
ONE PLATE HAS CLEARANCE HOLES, AND ITS MIRROR HAS THE APPROPRIATE TAPPED
HOLES INCLUDING NITRONIC 60 INSERTS.

THE SIZE OF ANY HOLES CREATED AS PART OF THE INITIAL MANUFACTURING, MUST ENABLE
US TO PERFORM THESE SUBSEQUENT STEPS WHEN DESIRED.

PARTS LIST

GENERAL NOTES: (UNLESS OTHERWISE SPECIFIED)

1. DO NOT SCALE FROM DRAWING.
2. REMOVE ALL SHARP EDGES, R.02 MIN.
3. ALL MACHINING FLUIDS SHALL BE WATER SOLUBLE AND FREE OF SULFUR, CHLORINE AND SILICONE.
4. SCRIBE, ENGRAVE OR MECHANICALLY STAMP DRAWING (NO INKS OR DYES) PART NUMBER, REVISION ON NOTED SURFACE OF PART FOLLOWED ON THE NEXT LINE WITH A THREE DIGIT SERIAL NUMBER. SERIAL NUMBERS START AT 001 FOR THE FIRST ARTICLE AND PROCEED CONSECUTIVELY. USE .12" HIGH CHARACTERS, UNLESS THE SIZE OF THE PART DICTATES SMALL CHARACTERS. A VIBRATORY TOOL MAY BE USED. EXAMPLE: D050090 A1 S/N 001
5. THE COMPONENT IS SYMMETRIC ABOUT THE ℄
6. DUAL DIMENSIONS (MILLIMETERS) APPEAR IN SQUARE BRACKETS [ ], PRIMARILY FOR ADVANCED LIGO TECHNICAL REFERENCE
7. BACKGROUND INFORMATION:
INITIAL DISCUSSIONS WITH MACHINISTS AT CALTECH INICATED THAT WATER JET CUTTING WOULD BE USED TO ACHIEVE THE BASIC SHAPES, THEN ANY FINISHING WOULD BE DONE BY MILLING WITH A R.25" CUTTER.

DIMENSIONS ARE IN INCHES
TOLERANCES:
.X ± 0.05
.XX ± 0.01
.XXX ± 0.005
ANGULAR ± 0.1 °

	NAME	DATE
DRAWN	RAJ	04/05
CHECKED	MPL	APR 05
APPROVED		

MATERIAL: 6061-T6 Al
FINISH: 32 µ inch

LIGO
CALIFORNIA INSTITUTE OF TECHNOLOGY
MASSACHUSETTS INSTITUTE OF TECHNOLOGY
ISR, GLASGOW UNIVERSITY GEO 600 GROUP

SYSTEM: ADVANCED LIGO
SUB-SYSTEM: SUS
NEXT ASSY: ASSEMBLY RIG_SINGLE CATCHER
PART NAME: INNER FACEPLATE
SIZE: E
DWG. NO.: D050090
REV.: A
SCALE: 1:4
PROJECTION:
SHEET 3 OF 3