REV.	DATE	DCN #	DRAWING TREE #
A	28 MAR 2006	E060057-00	E060059-A

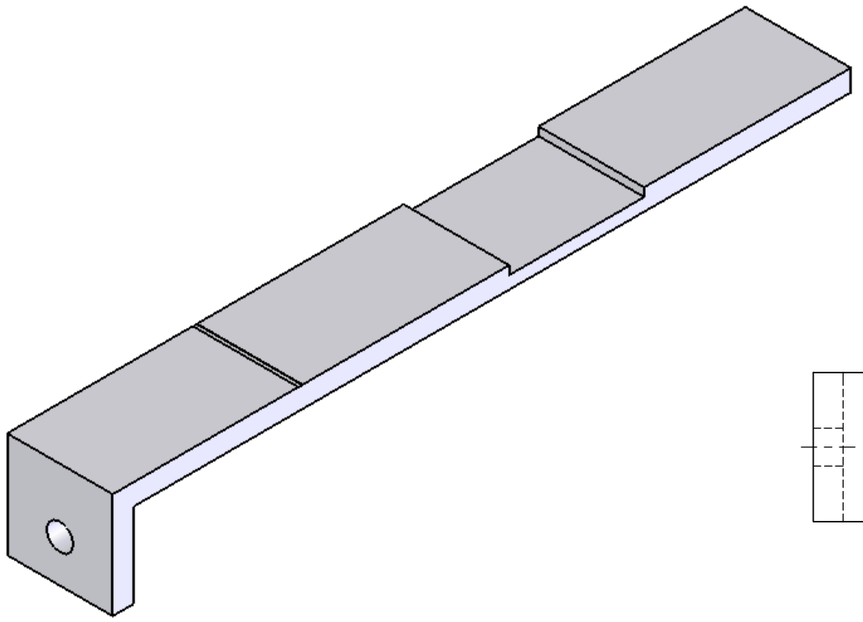

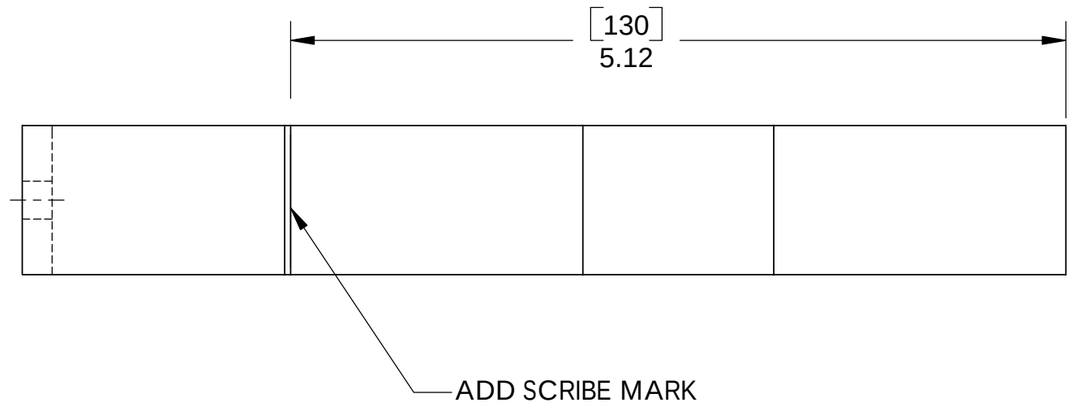

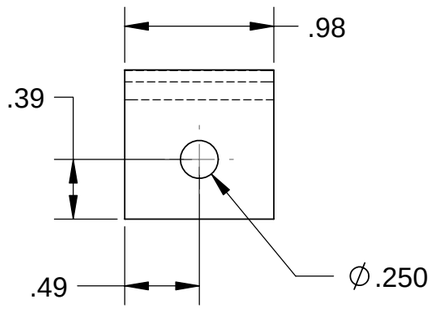

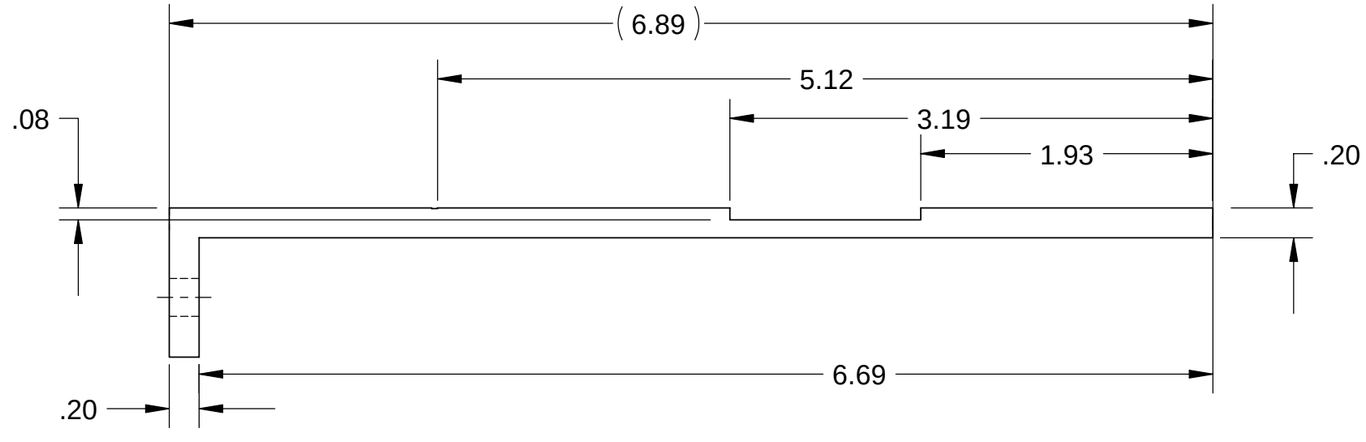

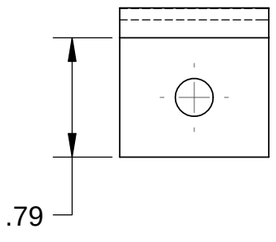

PARTS LIST

NOTES: (UNLESS OTHERWISE SPECIFIED)

1. DO NOT SCALE FROM DRAWING.
2. REMOVE ALL SHARP EDGES, R.02 MIN.
3. ALL MACHINING FLUIDS SHALL BE WATER SOLUBLE AND FREE OF SULFUR, CHLORINE AND SILICONE.

(4) SCRIBE, ENGRAVE OR MECHANICALLY STAMP DRAWING (NO INKS OR DYES) PART NUMBER, REVISION ON NOTED SURFACE OF PART FOLLOWED ON THE NEXT LINE WITH A THREE DIGIT SERIAL NUMBER. SERIAL NUMBERS START AT 001 FOR THE FIRST ARTICLE AND PROCEED CONSECUTIVELY. USE .12" HIGH CHARACTERS, UNLESS THE SIZE OF THE PART DICTATES SMALL CHARACTERS. A VIBRATORY TOOL MAY BE USED. EXAMPLE:
D050053-A
S/N 001

DIMENSIONS ARE IN INCHES

TOLERANCES:
.XX ± 0.01
.XXX ± 0.005

ANGULAR ± 0.5 °

MATERIAL: PFA 440HP

FINISH: µ inch

	NAME	DATE
DRAWN	R JONES	February 2005
DESIGNED	R JONES	February 2005
CHECKED	C Torrie	March 2005
APPROVED		

LIGO — CALIFORNIA INSTITUTE OF TECHNOLOGY
MASSACHUSETTS INSTITUTE OF TECHNOLOGY
IGR, GLASGOW UNIVERSITY GEO 600 GROUP

SYSTEM: ADVANCED LIGO

SUB-SYSTEM: SUS

NEXT ASSY: Catcher/Assembly Rig

PART NAME: Teflon Bearing Pad

SIZE: B | DWG. NO.: D050053 | REV.: A

SCALE: NTS | PROJECTION: | SHEET 1 OF 1